WORKSHOP MANUAL

11 LD series engines, code 1-5302-296

easymotoculture

11 LD 535-3
11 LD 625-3
11 LD 626-3

3st Edition

LOMBARDINI

SERVICE

COMPILER TECO/ATL	REG. CODE	MODEL N°	DATE OF ISSUE	REVISION 02	DATE	ENDORSED	
	1-5302-296	50510	01.89		17.04.2003		1

LOMBARDINI

easymotoculture

PREFACE

Every attempt has been made to present within this service manual, accurate and up to date technical information. However, development on the Lombardini series is continuos. Therefore, the information within this manual is subject to change without notice and without obligation.

The information contained within this service manual is the sole property of Lombardini. As such, no reproduction or replication in whole or part is allowed without the express written permission of Lombardini.

Information presented within this manual assumes the following:

1- The person or persons performing service work on Lombardini series engines is properly trained and equipped to safely and professionally perform the subject operation;

2- The person or persons performing service work on Lombardini series engines possesses adequate hand and Lombardini special tools to safely and professionally perform the subject service operation;

3- The person or persons performing service work on Lombardini series engines has read the pertinent information regarding the subject service operations and fully understands the operation at hand.

GENERAL SERVICE MANUAL NOTES:

1- Use only genuine Lombardini repair parts. Failure to use genuine Lombardini parts could result in sub-standard performance and low longevity.
2- All data presented are in metric format. That is, dimensions are presented in millimeters (mm), torque is presented in Newton-meters (Nm), weight is presented in kilograms (Kg), volume is presented in liters or cubic centimeters (cc) and pressure is presented in barometric units (bar).

LOMBARDINI
SERVICE

WARRANTY CERTIFICATE

The products manufactured by Lombardini Srl are warranted to be free from conformity defects for a period of 24 months from the date of delivery to the first end user.
For engines fitted to stationary equipment, working at constant load and at constant and/or slightly variable speed within the setting limits, the warranty covers a period up to a limit of 2000 working hours, if the above mentioned period (24 months) is not expired.
If no hour-meter is fitted , 12 working hours per calendar day will be considered.
For what concerns the parts subject to wear and deterioration (injection/feeding system, electrical system, cooling system, sealing parts, non-metallic pipes, belts) warranty covers a maximum limit of 2000 working hours, if the above mentioned period (24 months) is not expired.
For correct maintenance and replacement of these parts, it is necessary to follow the instructions reported in the documentation supplied with each engine.
To ensure the engine warranty is valid, the engine installation, considering the product technical features, must be carried out by qualified personnel only.
The list of the Lombardini authorized dealers is reported in the “Service” booklet, supplied with each engine.
Special applications involving considerable modifications to the cooling/lubricating system (for ex.: dry oil sump), filtering system, turbo-charged models, will require special written warranty agreements.
Within the above stated periods Lombardini Srl directly or through its authorized network will repair and/or replace free of charge any own part or component that, upon examination by Lombardini or by an authorized Lombardini agent, is found to be defective in conformity, workmanship or materials.
Any other responsibility/obligation for different expenses, damages and direct/indirect losses deriving from the engine use or from both the total or partial impossibility of use, is excluded.
The repair or replacement of any component will not extend or renew the warranty period.

Lombardini warranty obligations here above described will be cancelled if:

- Lombardini engines are not correctly installed and as a consequence the correct functional parameters are not respected and altered.
- Lombardini engines are not used according to the instructions reported in the “Use and Maintenance” booklet supplied with each engine.
- Any seal affixed to the engine by Lombardini has been tampered with or removed.
- Spare parts used are not original Lombardini.
- Feeding and injection systems are damaged by unauthorized or poor quality fuel types.
- Electrical system failure is due to components, connected to this system, which are not supplied or installed by Lombardini.
- Engines have been disassembled, repaired or altered by any part other than an authorized Lombardini agent.

Following expiration of the above stated warranty periods and working hours, Lombardini will have no further responsibility for warranty and will consider its here above mentioned obligations for warranty complete.
Any warranty request related to a non-conformity of the product must be addressed to the Lombardini Srl service agents.

easymotoculture

INTRODUCTION

This manual contains the most important information for the repair of LOMBARDINI air cooled, direct injection Diesel engines type **11LD535-3, 11LD625-3 e 11LD626-3.** This information is current upto April 17.04.2003 .

TABLE OF CONTENTS

I TROUBLESHOOTING ____ **Page 9**

II SAFETY DECALS - SAFETY INSTRUCTIONS ____ **" 10-11**

III MODEL NUMBER AND IDENTIFICATION ____ **" 12**

IV TECHNICAL DATA ____ **" 13**

V CHARACTERISTIC CURVES ____ **" 14**

VI OVERALL DIMENSIONS ____ **" 15**

VII MAINTENANCE- RECOMMENDED OIL TYPE - REFILLING ____ **" 16-17**

VIII DISASSEMBLY / REASSEMBLY ____ **" 19-44**

Aír cleaner . . . 19
Air cleaner components . . . 19
Belt tension adjustment . . . 20
Blower assembly . . . 21
Blower assembly components with 14 A alternator . . . 21
Blower assembly components with 21 A alternator . . . 21
Blower control pulley diameter . . . 22
CAMSHAFT . . . 37
Camshaft end play . . . 38
Camshaft gear . . . 32
Camshaft timing . . . 38
CheckIng main journals and crank pins . . . 34
Checking that piston is an original part . . . 28
Checks and cyiinder roughness . . . 28
Clearance between main journals/crank pins and connecting rod bearings (mm) . . . 35
Compression release (optional) . . . 23
CONNECTING ROD . . . 30
Connecting rod alignment . . . 31
Connecting rod big end bearing . . . 31
Connecting rod small end bearing and pin . . . 30
Connecting rod weight . . . 31
CRANKSHAFT . . . 33
Crankshaft center main bearing supports . . . 33
Crankshaft end play . . . 36
Crankshaft journal radius . . . 34
Crankshaft lubrication ducts . . . 34
Crankshaft pulley . . . 22
Crankshaft removal . . . 33
CYLINDER . . . 28
CYLINDER HEAD . . . 24
Dimensions and clearance between guides and valves (mm) . . . 26
Dimensions of camshaft journals and housings (mm) . . . 37
Electronic speed governor . . . 43
ELECTRONIC SPEED GOVERNOR (optional) . . . 43
Electronic speed governor control box . . . 44
Electronic speed governor layout . . . 43
Engine running with electronic speed governor . . . 44

easymotoculture

Exhaust manifold 19
Fan control belt 20
Flywheel 23
Gear cover, timing side 22
How to measure camshaft bearing and journal inside diameter 37
Hydraulic pump 3rd p.t.o., group 2 40
Hydraulic pump 4th p.t.o., group 1 40
Hydraulic pump p.t.o. 40
Injector 24
Injector projectiion 24
Intake manifold 20
Intake/exhaust cam height 38
Main bearing and connecting rod big end bearing inside diameter 35
Main bearing housings 36
Main bearing support, flywheel side 33
Main bearing support, gear side 32
Main bearing supports 36
Main journal and crank pin diameter (mm) 34
MECHANICAL SPEED GOVERNOR 41
Mechanical speed governor components (standard) 41
Mechanical speed governor components for special generating sets 42
Mechanical speed governor operation (standard) 41
Mechanical speed governor setting 42
Oil pump gear 32
PISTON 28
Piston - Refitting 30
Piston clearance 30
Piston rings - End gaps (mm) 29
Piston rings - Fitting sequence 29
Piston weight 29
Pistons rings - Clearance between grooves (mm) 29
Pushrod tube spring fitting 27
Rocker arm assembly 24
Shroud and plates 20
Spring for extra fuel supply at starting 42
Starting with electronic speed governor 44
Tank 22
Timing gear 32
Use an inside micrometer to measure the inside diameter of main bearings. 35
Use an outside micrometer gauge to measure camshaft lobe height. 37
Use of 3rd and 4th p.t.o. 40
Valve / rocker arm clearance 23
Valve guide insertion 26
Valve guides and cylinder head housìngs 26
Valve material 25
Valve seat lapping 27
Valve seats and housings 27
Valve springs 25
Valve timing check 39
Valve timing without considering timing marks 38
Vatves 25

IX LUBRICATION SYSTEM 45-47

LUBRICATION SYSTEM 45
Oil filter cartridge 46
Oil pressure check 46
Oil pressure curve at full speed 47
Oil pressure curve at idling speed 47
Oil pressure relief valve 46
Oil pump 46

easy motoculture

X FUEL SYSTEM 48-55

(STATIC) INJECTION TIMING 53
Bosch injection pump replacement - Reference mark on delivery side 51
Bosch Injection Pump replacement - Shim reference number 52
Fuel feeding pump 48
Fuel feeding pump drive rod protrusion 48
Fuel feeding/injection circuit 48
Fuel fliter 48
How to check injection pump delivery valve sealing 50
How to check plunger and barrel for internal leakage 50
INJECTION PUMP 49
Injection pump type Bosch 49
Injection pump type LOMBARDINI - OMAP 49
Injection timing check 53
Injection timing checking device 53
Injection timing correction 54
Injection timing reference marks on crankcase and flywheel 54
Injection timing reference marks on the pulley and the gear cover 54
INJECTOR 55
Injector setting 55
LOMBARDINI-OMAP injection pump replacement 52
Nozzle 55
Plunger 50
Test data for injection pump delivery at the test bed - Pump type Bosch 51
Test data for injection pump delivery at the test bed - Pump type LOMBARDINI-OMAP 51

XI ELECTRIC SYSTEM 56-61

12 V, 21 A Alternator 57
12,5 V, 14 A Alternator 56
14 V, 33 A Bosch G1 alternator battery charger curve 60
Alternator battery charger curve (12 V, 21 A) 57
Alternator battery charger curve (12.5 V, 14A) 57
Alternator type Bosch Gil 14 V, 33 A layout 60
Alternator type Bosch Gl 14 V, 33 A 60
Characteristic curves for starting motor type Bosch JF (R) 12 V 61
Checking for cable continuity 58
Connections for LOMBARDINI-DUCATI voltage regulator 59
Electric starting layout without battery charging light 56
Electrical starting layout with battery charging light 56
How to check voltage regulator for proper operation 59
Magnetization checking tool (Part No. 7000-9727-001) 58
STARTING MOTOR 61
Starting motor layout 61
VOLTAGE REGULATOR 58

XII SETTINGS 62-63

Full speed setting in no-load conditions (standard) 62
Injection pump delivery setting 62
Injection pump delivery setting with engine at the torque dynamometer 63
Idling speed setting in no-load conditions (standard) 62
Required settings (as most commonly applies) 63
Stop setting 63

XII STORAGE 64

Temporary protection (1÷6 months). 64
Permanent protection (over 6 months) 64
How to prepare the engine for operation 64

XIV MAIN TORQUE SPECIFICATIONS AND USE OF SEALANTS 66
USE OF SEALANTS 67

esynotoculture

easymotoculture

NOTE

easymotoculture

POSSIBLE CAUSES AND TROUBLE SHOOTING

The following table contains the possible cause of some failures hich may occur during operation.
Always perform the simplest checks before removing or replacing any part.

	POSSIBLE CAUSE	TROUBLE										
		Engine does not start	Engine starts but stops	No acceleration	Non-uniform speed	Black smoke	White smoke	Too low oil pressure				
FUEL CIRCUIT	Clogged pipings	●										
	Clogged fuel filter	●	●	●								
	Air inside fuel circuit	●	●	●								
	Clogged tank breather	●	●	●								
	Faulty feed pump	●	●									
	Stuck injector	●										
	Stuck injection pump valve	●										
	Wrong injector setting					●						
	Sticking injection pump rack	●		●	●							
	Wrong injection pump setting			●		●						
LUBRICATION	Too high oil level				●		●					
	Stuck pressure relief valve							●				
	Incorrect relief valve setting							●				
	Worn-oil pump							●				
	Air inside oil suction pipe							●				
	Faulty pressure gauge or switch							●				
	Clogged oil suction pipe							●				
ELECTRIC SYSTEM	Battery dis-charged	●										
	Wrong or inefficient cable connection	●										
	Defective starter switch	●										
	Defective starter	●										
MAINTE-NANCE	Clogged air filter	●		●		●						
	Excessive idle operation						●					
	Incomplete running-in						●					
	Engine overloaded			●		●						
SETTINGS / REPAIR	Advanced injection timing	●										
	Retarded injection timing					●						
	Incorrect governor linkage adjustment	●			●							
	Broken or loose governor spring			●								
	Too low idle-speed setting		●									
	Worn-out or stuck piston rings						●					
	Worn-out cylinders						●					
	Sticking valves	●										
	Worn-out bearings							●				
	Governor linkage not freely operating	●	●		●							
	Crankshaft not turning freely					●						

easymotoculture

SAFETY AND WARNING DECALS

DANGER

Failure to comply with the instructions could result in damage to persons and property

CAUTION

Failure to comply with the instructions could lead to technical damage to the machine and/or system

SAFETY INSTRUCTIONS

- Lombardini Engines are built to supply their performances in a safe and long-lasting way. To obtain these results, it is essential for users to comply with the servicing instructions given in the relative manual along with the safety recommendations listed below.
- The engine has been made according to a machine manufacturer's specifications and all actions required to meet the essential safety and health safeguarding requisites have been taken, as prescribed by the current laws in merit. All uses of the engine beyond those specifically established cannot therefore be considered as conforming to the use defined by Lombardini which thus declines all liability for any accidents deriving from such operations.
- The following indications are dedicated to the user of the machine in order to reduce or eliminate risks concerning engine operation in particular, along with the relative routine maintenance work.
- The user must read these instructions carefully and become familiar with the operations described. Failure to do this could lead to serious danger for his personal safety and health and that of any persons who may be in the vicinity of the machine.
- The engine may only be used or assembled on a machine by technicians who are adequately trained about its operation and the deriving dangers. This condition is also essential when it comes to routine and, above all, extraordinary maintenance operations which, in the latter case, must only be carried out by persons specifically trained by Lombardini and who work in compliance with the existing documentation.
- Variations to the functional parameters of the engine, adjustments to the fuel flow rate and rotation speed, removal of seals, demounting and refitting of parts not described in the operation and maintenance manual by unauthorized personnel shall relieve Lombardini from all and every liability for deriving accidents or for failure to comply with the laws in merit.
- On starting, make sure that the engine is as horizontal as possible, unless the machine specifications differ. In the case of manual start-ups, make sure that the relative actions can take place without the risk of hitting walls or dangerous objects, also considering the movements made by the operator. Pull-starting with a free cord (thus excluding self-winding starting only), is not permitted even in an emergency.
- Make sure that the machine is stable to prevent the risk of overturning.
- Become familiar with how to adjust the rotation speed and stop the engine.
- Never start the engine in a closed place or where there is insufficient ventilation. Combustion creates carbon monoxide, an odourless and highly poisonous gas. Lengthy stays in places where the engine freely exhausts this gas can lead to unconsciousness and death.

easymotoculture

- The engine must not operate in places containing inflammable materials, in explosive atmospheres, where there is dust that can easily catch fire unles specific, adequate and clearly indicated precautions have been taken and have been certified for the machine.
- To prevent fire hazards, always keep the machine at least one meter from buildings or from other machinery.
- Children and animals must be kept at a due distance from operating machines in order to prevent hazards deriving from their operation.
- Fuel is inflammable. The tank must only be filled when the engine is off. Thoroughly dry any spilt fuel and move the fuel container away along with any rags soaked in fuel or oil. Make sure that no soundproofing panels made of porous material are soaked in fuel or oil. Make sure that the ground or floor on which the machine is standing has not soaked up any fuel or oil.
- Fully tighten the tank plug each time after refuelling. Do not fill the tank right to the top but leave an adequate space for the fuel to expand.
- Fuel vapour is highly toxic. Only refuel outdoors or in a well ventilated place.
- Do not smoke or use naked flames when refuelling.
- The engine must be started in compliance with the specific instructions in the operation manual of the engine and/or machine itself. Do not use auxiliary starting aids that were not installed on the original machine (e.g. Startpilot').
- Before starting, remove any tools that were used to service the engine and/or machine. Make sure that all guards have been refitted.
- During operation, the surface of the engine can become dangerously hot. Avoid touching the exhaust system in particular.
- Before proceeding with any operation on the engine, stop it and allow it to cool. Never carry out any operation whilst the engine is running.
- The coolant fluid circuit is under pressure. Never carry out any inspections until the engine has cooled and even in this case, only open the radiator plug or expansion chamber with the utmost caution, wearing protective garments and goggles. If there is an electric fan, do not approach the engine whilst it is still hot as the fan could also start operating when the engine is at a standstill. Only clean the coolant system when the engine is at a standstill.
- When cleaning the oil-cooled air filter, make sure that the old oil is disposed of in the correct way in order to safeguard the environment. The spongy filtering material in oil-cooled air filters must not be soaked in oil. The reservoir of the separator pre-filter must not be filled with oil.
- The oil must be drained whilst the engine is hot (oil T ~ 80°C). Particular care is required to prevent burns. Do not allow the oil to come into contact with the skin.
- Make sure that the drained oil, the oil filter and the oil it contains are disposed of in the correct way in order to safeguard the environment.
- Pay attention to the temperature of the oil filter when the filter itself is replaced.
- Only check, top up and change the coolant fluid when the engine is off and cold. Take care to prevent fluids containing nitrites from being mixed with others that do not contain these substances since "Nitrosamine", dangerous for the health, can form. The coolant fluid is polluting and must therefore be disposed of in the correct way to safeguard the environment.
- During operations that involve access to moving parts of the engine and/or removal of rotating guards, disconnect and insulate the positive wire of the battery to prevent accidental short-circuits and to stop the starter motor from being energized.
- Only check belt tension when the engine is off.
- Only use the eyebolts installed by Lombardini to move the engine. These lifting points are not suitable for the entire machine; in this case, the eyebolts installed by the manufacturer should be used.

easymotoculture

MODEL NUMBER AND IDENTIFICATION

11LD535-3 — 11 LD 625-3 — 11LD626-3

Engine group number

LOMBARDINI

Diesel

N° Cilynders

R.P.M.

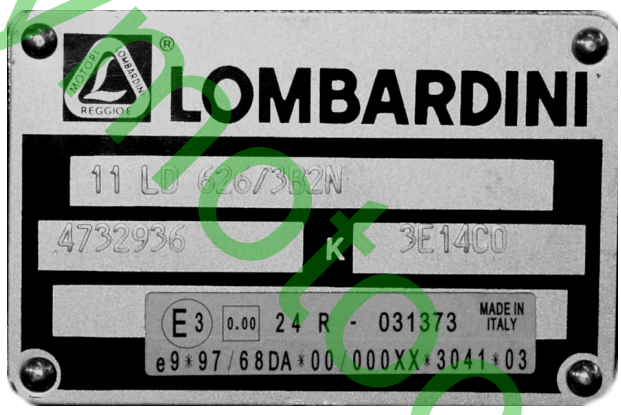

easyworkculture

ENGINE TYPE			11LD 535-3	11LD 625-3	11LD 626-3
Number of cylinders		N.	3	3	3
Bore		mm	88	95	95
Stroke		mm	88	88	88
Displacement		Cm^3	1605	1870	1870
Compression ratio			17:1	17:1	17:1
R.P.M.			3000	3000	3000
Power kW/HP	N DIN 70020		25,4/33,3	28/38	30,8/42
	NB DIN 6270		22/30	26/35,4	28,6/39
	NA DIN 6270		20/27	24/32,7	26,3/35,8
Max. torque		kgm	9,2 @2000	10,6 @2000	11,7 @2000
Max. torque at 3rd p.t.o. at 3200 r.p.m.		kW/PS	13/17,7	13/17,7	13/17,7
Max. torque at 4th p.t.o. at 3200 r.p.m. permanent		kW/PS	7,98/10,8	7,98/10,8	7,98/10,8
Specific fuel consumption *		g/CV.h	196	190	184
Tank capacity		l.	15	15	15
Oil consumption **		kg/h	0,036	0,042	0,042
Oil sump capacity		l.	5	5	5
Dry weight		kg	170	170	170
Combustion air volume at 3000 r.p.m.		l./min'	2100	2400	2400
Cooling air volume at 3000 r.p.m.		l./min'	34000	38000	38000
Max. permissible driving shaft axial load in both directions		kγ	300	300	300
Max. inclination	momentary	α	35°	35°	35°
	lasting up to 1 h.	α	25°	25°	25°
			***	***	***

* Referred to max. NB power
** At NA power
*** Depending on the application

easymotoculture

CHARACTERISTICS POWER, TORQUE AND SPECIFIC FUEL CONSUMPTION CURVES

11 LD 535-3

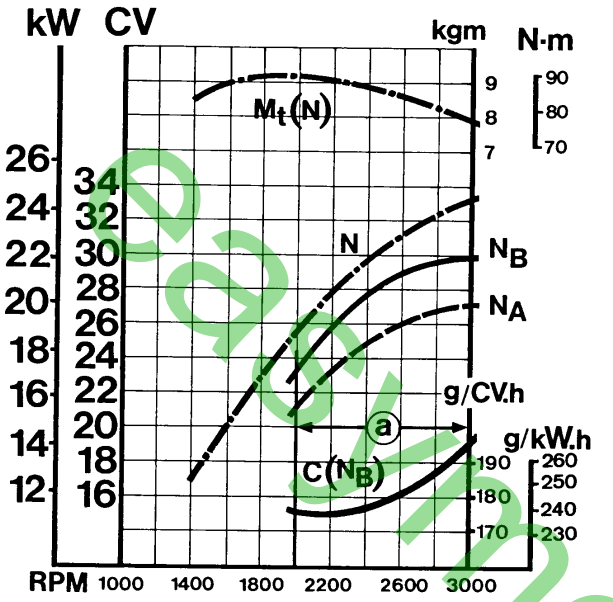

11 LD 625-3

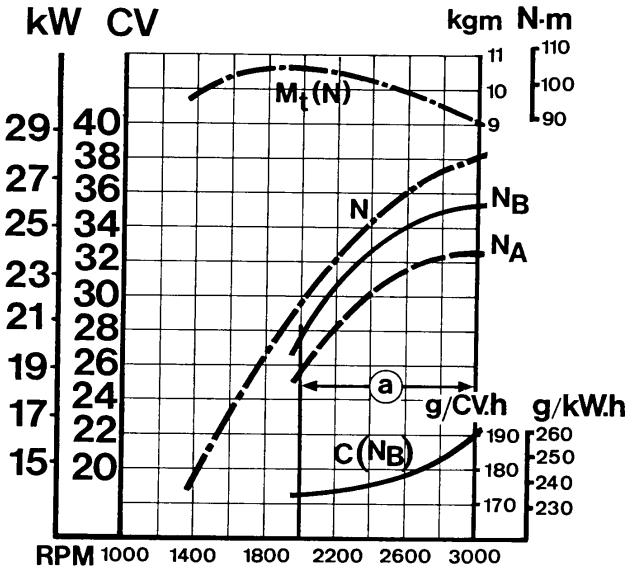

11 LD 626-3

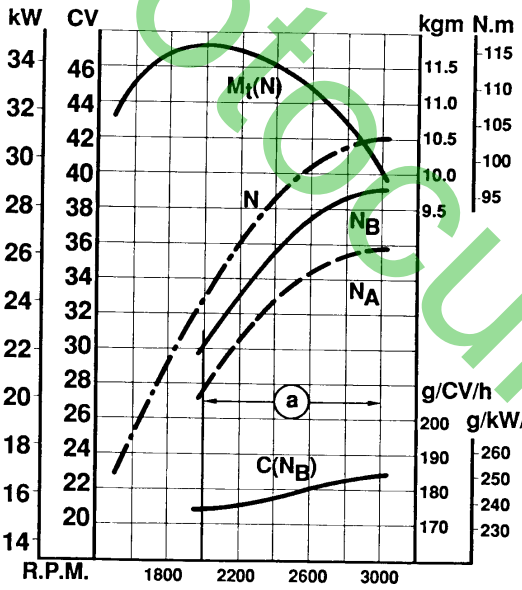

agrinotoculture

N (DIN 70020) Automotive rating, intermitent operation with variable speed and variable load.
N_B (DIN 6270) Rating with no overload capability, continuos light duty operation with constant speed and variable load.
N_A (DIN 6270) Continuos rating with overload capability, continuos heavy duty with constant speed and constant load.

The above power values refer to an engine fitted with air cleaner and standard muffler, after testing and at the environmental conditions of 20° C and 1 bar.
Max. power tolerance is 5%.
Power decreases by approximately 1 % every 100 m altitude and by 2 % every 5°C above 20° C.

C (N_B) : Specific fuel consumption at **N_B** power.
Mt : Torque at **N**
ⓐ : Range of application for continuous operation.

Note: Consult LOMBARDINI for power, torque curves and specific consumptions at rates differing from those given above.

OVERALL DIMENSIONS 11LD535-3, 11LD625-3, 11LD626-3

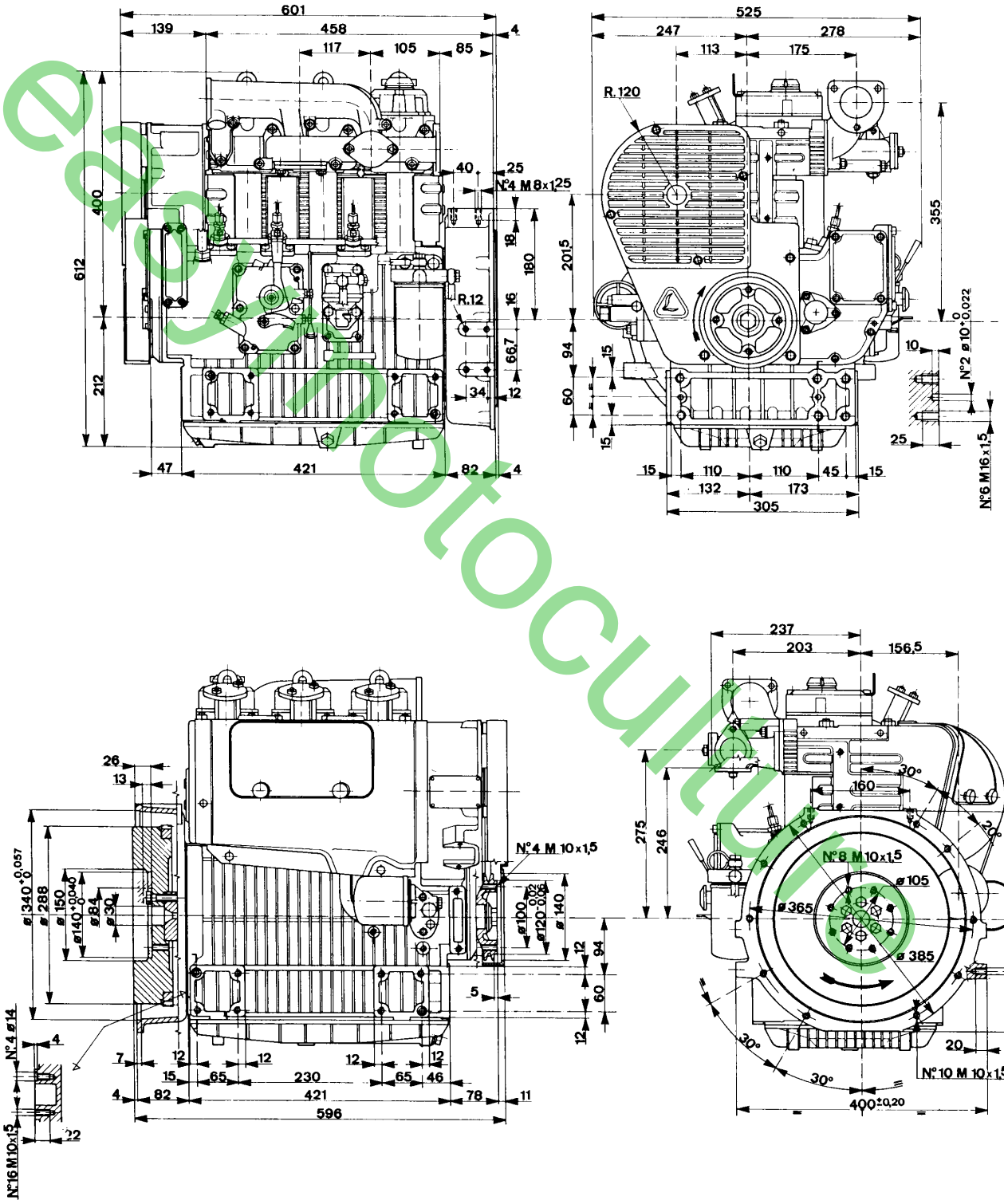

easyautoculture

! Failure to carry out the operations described in the table may lead to technical damage to the machine and/or system

ENGINE MAINTENANCE 11 LD 535-3 / 11 LD 625-3 / 11 LD 626-3

OPERATION	COMPONENT		INTERVAL (HOURS)								
				10	50	125	250	500	1000	2500	5000
CLEANING	AIR CLEANER			●							
	FEED PUMP FILTER						●				
	HEAD AND CYLINDER FINS (*)						●				
	FUEL TANK								●		
	INJECTORS							●			
	INTERNAL OIL FILTER								●		
CHECK	LEVEL	AIR CLEANER OIL		●							
		CRANKCASE OIL		●							
		BATTERY FLUID			●						
	DELIVERY VALVE TIGHTNESS							●			
	FAN BELT TENSION					●					
	VALVE AND ROCKER ARM CLEARANCE							●			
	INYECTOR SPRAY PATTERN										
REPLACEMENT	OIL	AIR CLEANER (**) (***)		●							
		CRANKCASE (***)					●				
	OIL FILTER CARTRIDGE						●				
	FUEL FILTER CARTRIDGE						●				
	FAN BELT							●			
OVERHAUL INSPECTION	PARTIAL (****)									●	
	COMPLETE										●

(*) Under severe orking conditions, clean daily.
(**) Under extremely dusty conditions, change every 4-5 hours.
(***) See recommended oil type.
(****) Includes checking cylinders, piston rings, guides, springs, grinding valve seats, de-carboning heads and cylinders as welle as checking injection pump and injectors.

CAPACITIES (LITERS)

Standard fuel tank: LITERS 15

As for filters, tanks and special crankcases please refer to LOMBARDINI instructions.

easymotoculture

The engine could be damaged if allowed to operate with insufficient oil. It is also dangerous to add too much oil as its combustion could sharply increase the rotation speed.
Use a suitable oil in order to protect the engine.
The lubrication oil influences the performances and life of the engine in an incredible way.
The risk of piston seizure, jammed piston rings and rapid wear of the cylinder liner, the bearings and all moving parts increases if oil whose characteristics differ from the recommended type is used, or if the oil is not regularly changed. All this notably reduces engine life.
Oil viscosity must suit the ambient temperature in which the engine operates.

Old oil can cause skin cancer if repeatedly left in contact with the skin and for long periods of time. If contact with the oil is inevitable, you are advised to thoroughly wash your hands with soap and water as soon as possible.
Appropriate protective gloves etc should be wore during this operation.
Old oil is highly polluting and must be disposed of in the correct way. Do not litter.

easymotocultre

RECOMMENDED OIL

AGIP SUPERDIESEL MULTIGRADE 15W40 specifications API CF-4/SG ACEA E2,B2 MIL-L-46152 D/E.
In the countries where AGIP products are not available, use oil API SJ/CF for Diesel engines or oil corresponding to the military specification MIL-L-46152 D/E.

OIL SUPPLY (liters) 11 LD 535-3 / 625-3 / 626-2

filter included	**5,0**

ACEA SEQUENCES

A = Gasoline (Petrol)
B = Light Diesel fuels
E = Heavy Diesel fuels

Required levels :

A1-96
A2-96
A3-96

B1-96
B2-96
B3-96

E1-96
E2-96
E3-96

GRADE

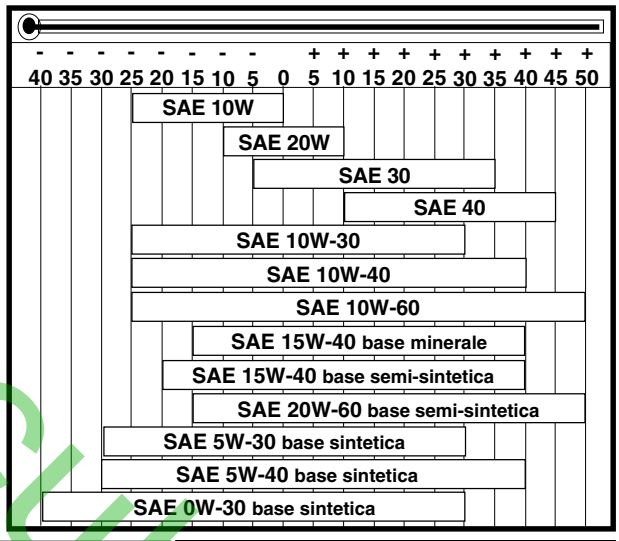

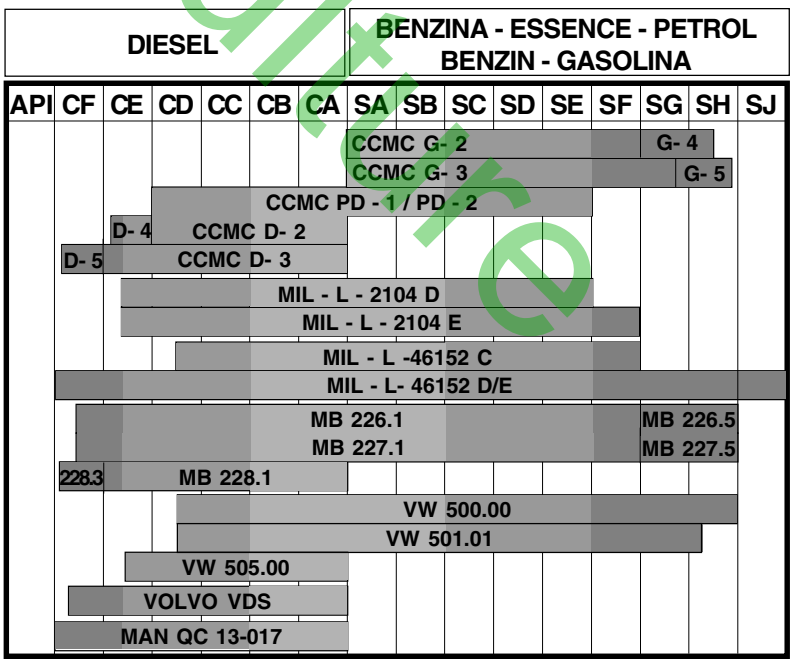

NOTE

easymotoculture

! During repair operations, when using compressed air, wear eye protection.

DISASSEMBILY AND REASSEMBLY

Besides disassembly and reassembiy operations this chapter also includes checking and setting specifications, dimensions, repair and operating instructions. Always use original LOMBARDINI spare parts for proper repair operations.

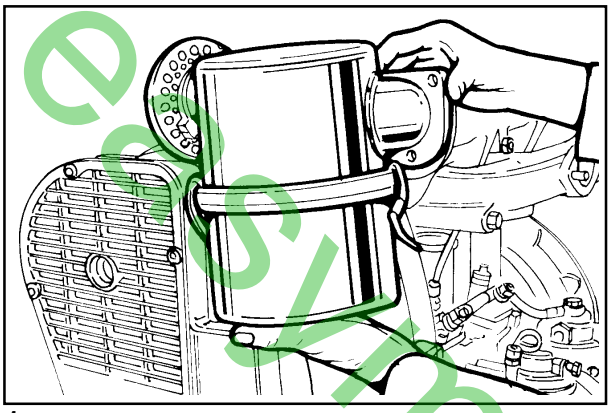

1

⚠ Do not blow the paper filter element with compressed air to clean.

! Check gaskets and replace as necessary. Check that flange welds are free of defective spots.

Aír cleaner

Carefully clean bowl and filtering elements with DieseL fuel and blow through with compressed air. Top up with engine oil to the mark. When refitting tighten nuts at 2.5 Kgm. See Page 16-17 for periodic maintenance detaiis.

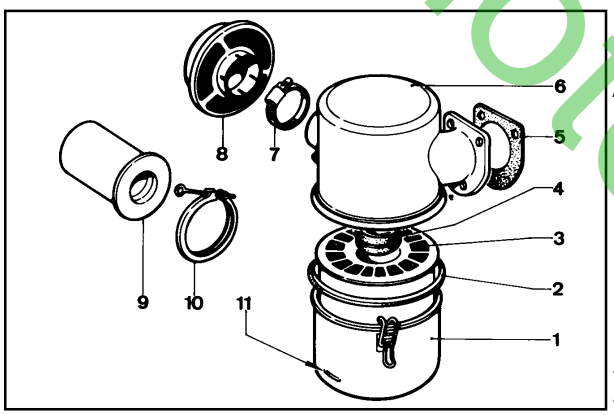

2

! Replace if irreparably clogged.

Air cleaner components

1 Bowl
2 External seal ring
3 Filtering element
4 Internal seal ring
5 Gasket
6 Cover
7 Cover clamp
8 Cap
9 Centrifugal pre-filter
10 Centrifugal pre-filter clamp
11 Oil level mark

Note: It is inadvisable to blow compressed air on to the paper filter element. If necessary, lightly and repeatedly tap the element on a hard surface to eliminate any excess dirt. See page 16-17 for the maintenance or replacement instructions.

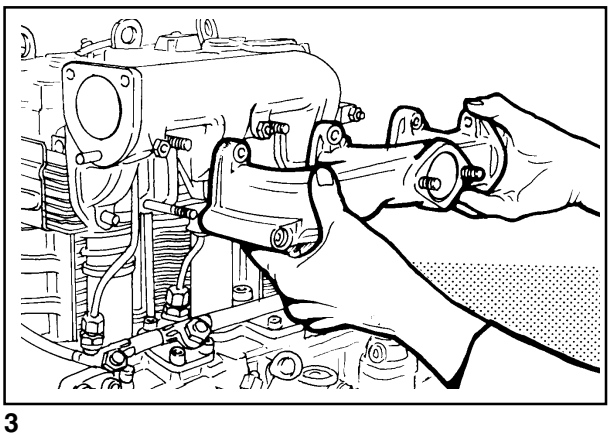

3

⚠ Allow the exhaust manifold to cool before demounting it in order to prevent scorching and burns.

Exhaust manifold

Check that the inside is clean. To avoid flange breakage check that heads are in line before tightening nuts. Replace gaskets. Tighten nuts at 2 Kgm.

easymotoculture

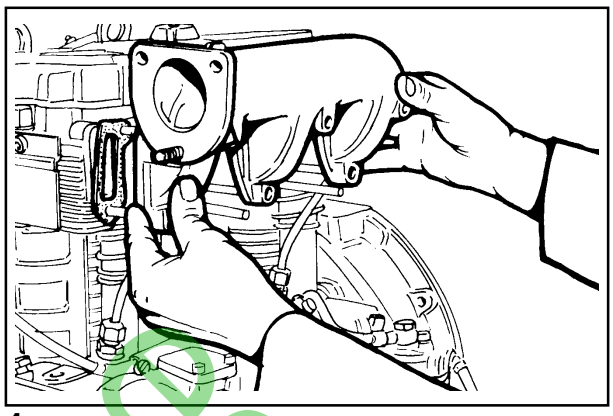

4

Intake manifold

Check flange surface for warpage and correct if necessary. Before refitting check that heads are in line. Replace gaskets. Tighten nuts at 2.5 Kgm.

Note: In case of low temperature starting we can supply a manifold with provision for a glow plug for air preheating.

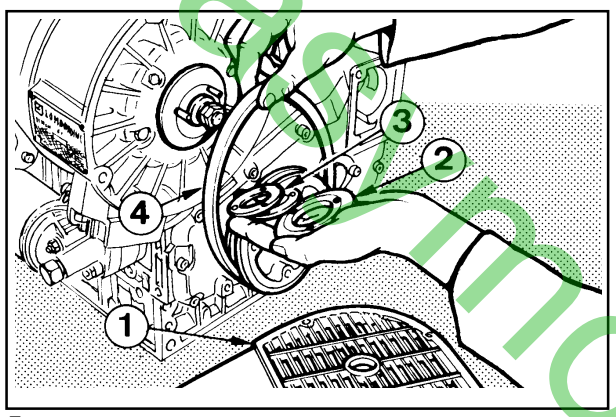

5

Fan control belt

Components:
1 Guard
2 Pulley
3 Spacers
4 'V'-belt

Loosen the belt guard bolts and the nuts securing the pulley. Remove 'V'-belt and check for wear. See Page 16 for periodic maintenance details.

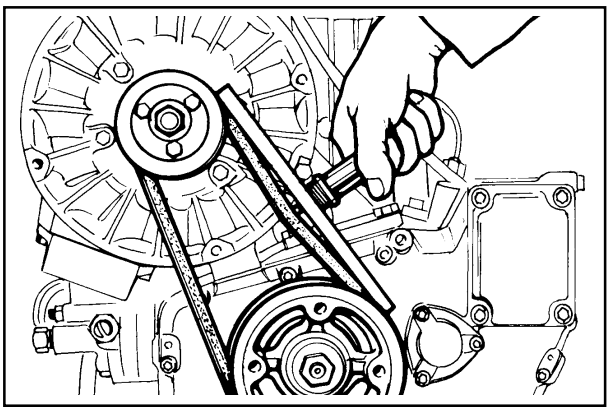

6

⚠ Only check the belt tension when the engine is at a stand still

Belt tension adjustment

Belt tension can be adjusted by adding or removing the spacers located between the pulleys. Spacers are 0.5, 1.0 and 2.0 mm thick.

Tension check

A 4 Kg. load located halfway between the pulleys should cause the belt to bend 5÷15 mm.

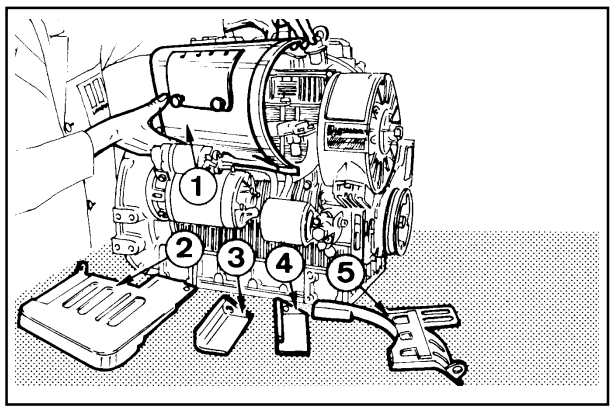

7

Shroud and plates

By means of plates **2**, **3** and **4** the shroud i**1**sends air to the cylinders for cooling purposes. Being lined with sound attenuating material it also reduces the noise generated by the blower fan and cylinders.

easymotoculture

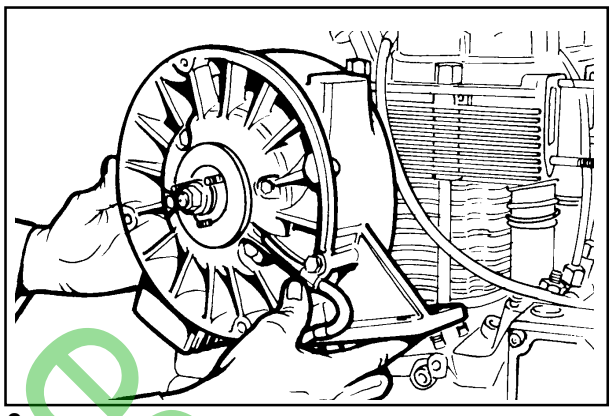

8

⚠ Before demounting the cooling fan, disconnect the positive battery cable to prevent accidental short-circuits which could consequently energize the starter motor.

Blower assembly

Data plate and voltage regulator are fixed outside the blower housing. A 14 A or 21 A alternator is housed inside the stator. See Page 56-57 and 60 for the alternator technical data. See Page 13 for the cooling air volume.

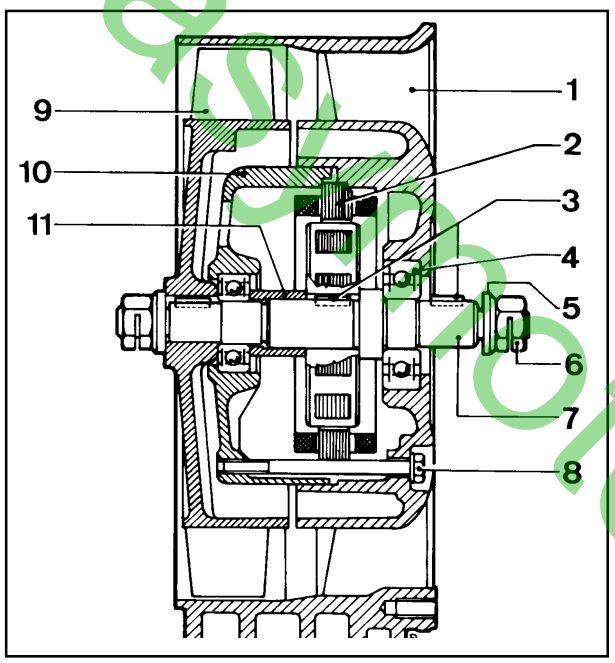

9

Blower assembly components with 14 A alternator

1 Housing
2 14 A alternator
3 Key
4 Ball bearing
5 Washer
6 Nut
7 Shaft
8 Bolt
9 Fan
10 14 A alternator bell
11 Spacer

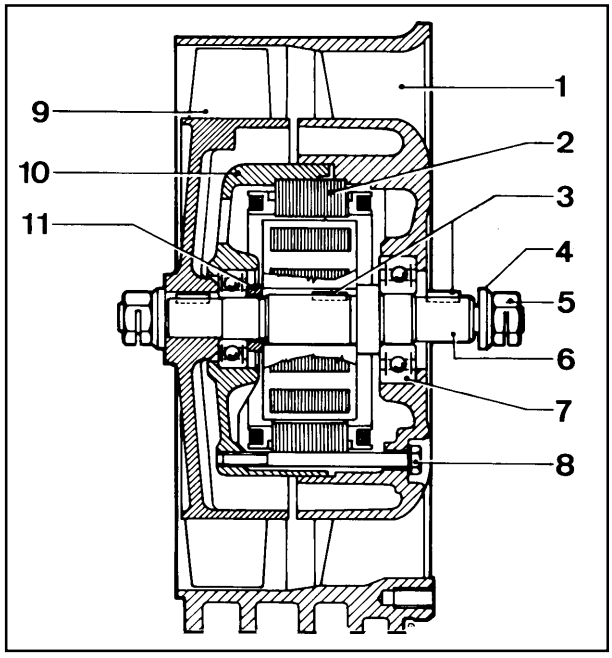

10

Blower assembly components with 21 A alternator

1 Housing
2 21 A alternator
3 Key
4 Washer
5 Nut
6 Shaft
7 Bearing
8 Bolt
9 Fan
10 21 A alternator beli
11 Spacer

easyphotoculture

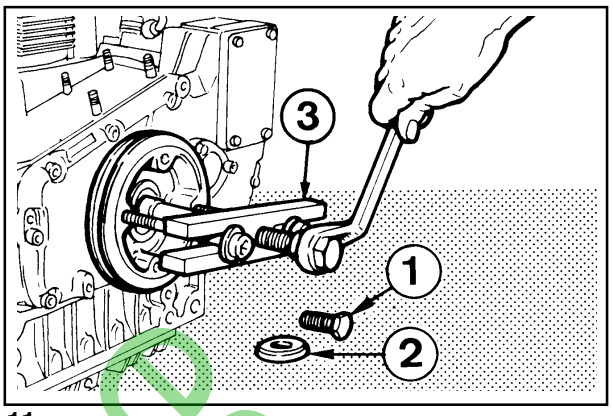

11

Crankshaft pulley

Components:
1 Nut
2 Washer
3 Puller, Part No. 7271-3595-048

Loosen the nut by turning clockwise and remove the pulley using the puller. The pulley has reference marks for the top dead center (See Page 51). Tighten the bolt at 300 Nm.

Note: The crankshaft end play can be checked only after tightening the pulley.

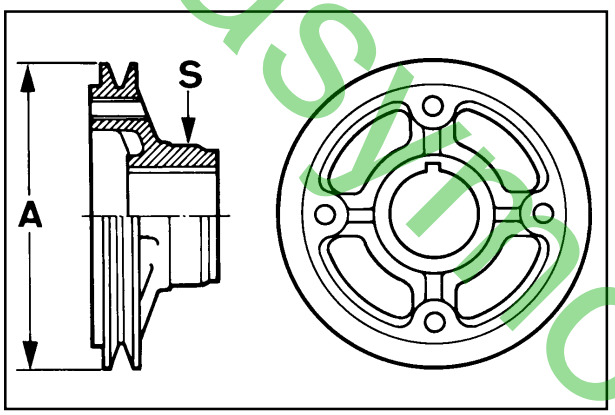

12

Blower control pulley diameter

Three pulleys with different diameter size A are available depending on the type of engine setting:
A = 142 mm (from 2401 to 3000 r.p.m.)
A1 = 147 mm (from 2001 to 2400 r.p.m.)
A2 = 163 mm (from 1500 to 1800 r.p.m.)
Check **S** surface in contact with oil seal ring and, if necessary, rub with a fine grain emery cloth.

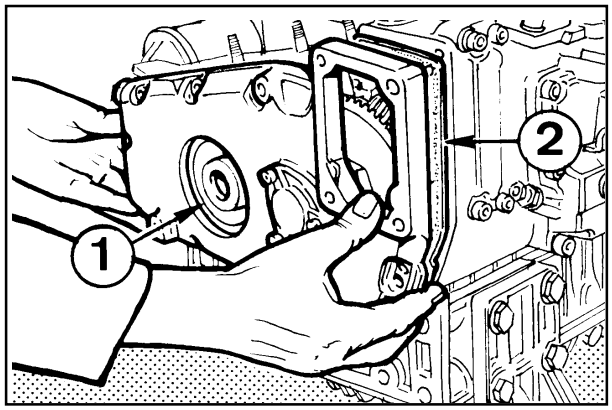

13

Gear cover, timing side

Loosen screws and remove gear cover.
When refitting tighten screws at 2.5 Kgm.
Check oil seal ring **1** and replace if warped, hardened or worn-out.
Replace gasket **2**

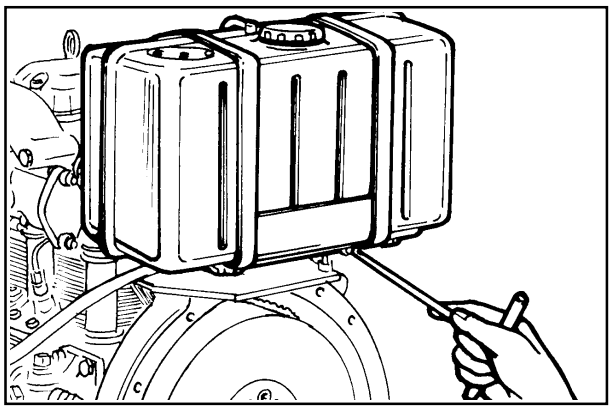

14

⚠ Do not smoke or use naked flames during the demounting operations as these could cause explosions or fire outbreaks. Fuel fumes are highly toxic. Only carry out the operations outdoors or in a well ventilated place.
Keep your face well away from the filler cap or you could inhale harmful fumes. Dispose of fuel in the correct way as it is highly polluting. Do not litter.

Tank

Remove fuel filter and loosen clamp screws. Completely empty the tank and check that no impurities are found inside. Check that cap breather is not clogged.

casamotoculture

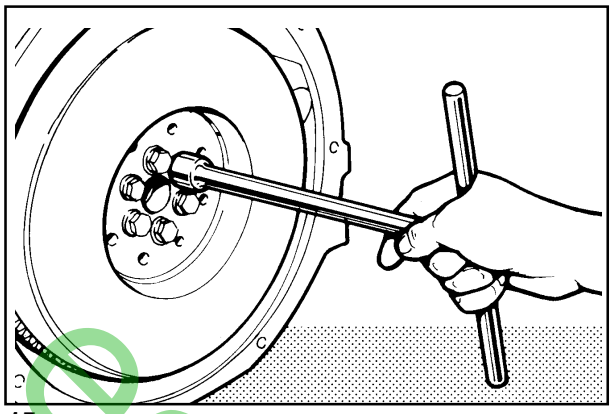

15

During the demounting phases, pay particular attention to prevent the flywheel from dropping as this could seriously injure the operator.
Wear protective goggles when removing the flywheel ring.

Flywheel

Loosen the bolts which fix the flywheei to the crankshaft. To replace starter ring gear heat it up to 300°C for 15÷20 minutes. Drive it onto the flywheei caretully checking that it perfectly fits into its seat. Let it cool down slowly. When refitting tighten bolts at 14 kgm.

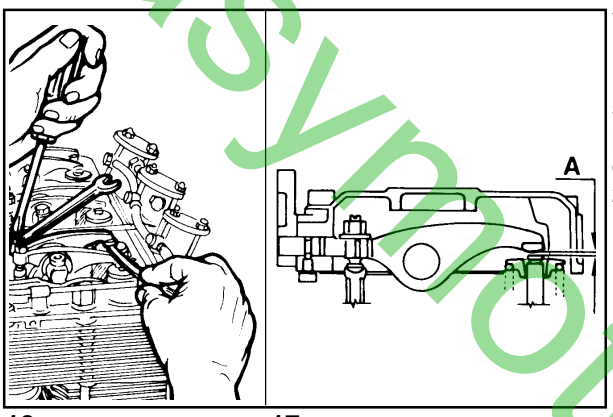

16 17

Valve / rocker arm clearance

Remove rocker arm cover and check gaskets for breakage. Setting shouid be pertormed when the engine is cold: bring each cylinder piston to the top dead center on the compression stroke and set clearance **A** at 0.15÷0.20 mm. When refitting tighten cover screws by 2 kgm.

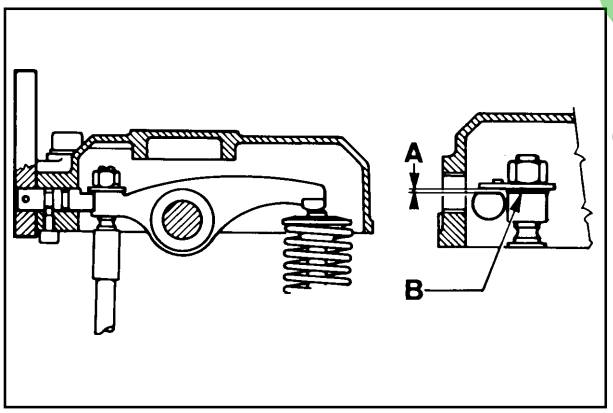

18

Compression release (optional)

Bring piston to top dead center on the compressìon stroke. Unscrew rocker arm cover side plug and measure clearance **A** should be 0.30÷0.40 mm. If necessary place a 0.2 or 0.5 mm shim at **B**

easymotoculture

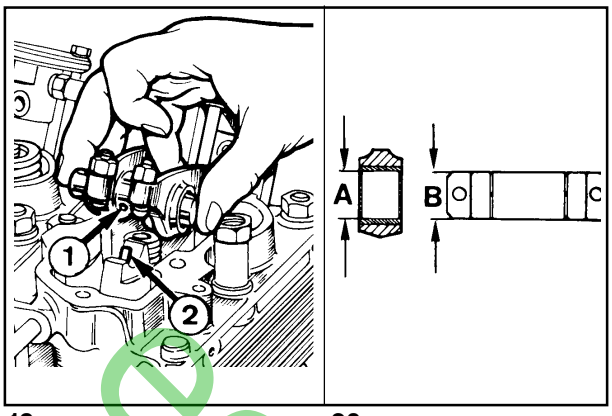

19

20

Rocker arm assembly

Components:
1 Bore
2 Lubricatíon tube

Dimensions:
A = 18.032÷18.050
B = 17.989÷18.000

If (**A-B**) clearance exceeds 0. 135 mm replace pin and rocker arms. When refitting check that lubrication tube **2** perfectly fits into centering bore **1** Tighten screws at 2.5 Kgm.

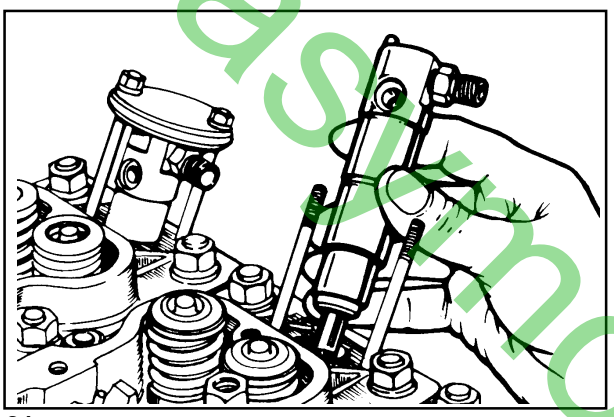

21

Injector

Clean injector and check calibrated pressure as indicated on page 52. Tighten the fixing nuts at 1 Kgm.

Note: Extreme care should be taken not to loose ìnjector sealing gaskets/shims.
New shims of the same thickness should be installed.

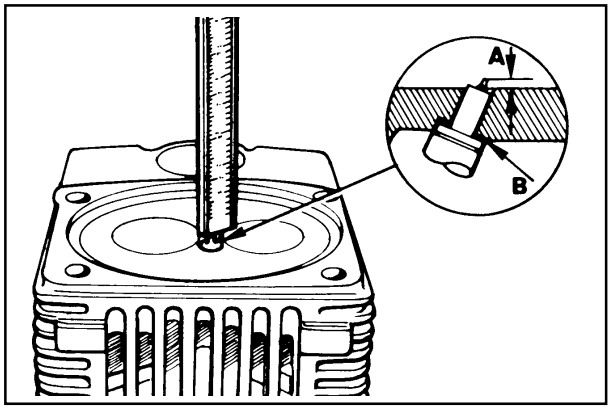

22

Injector projectiion

Check injector projection after removing the cylinder head.
The end of nozzle **A** should project 3.0÷3.5 mm from the cylinder head liane.
Adjust injector projection by means of copper shims **B** measuríng 0.50 and 1.00 mm in thickness.

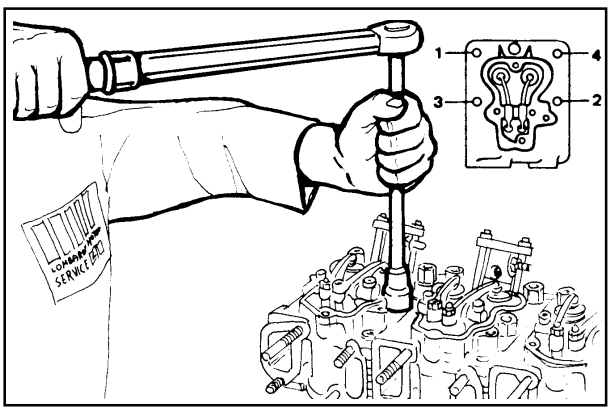

23

! Do not demount or remount while hot as this could lead to deformations.

CYLINDER HEAD

Do not remove it when hot to avoid warpage.
If cylinder head is warped, level it off by removing a maximum of 0.3 mm. When refitting tighten only if sure that the rocker arm lubrication tube is weli inside its hole and thal ali three heads are in line; for proper alignment mount a temporary exhaust or intake manifold.
Always replace copper head gasket; see Page 30 for choosing the right thickness.
See Page 27 for fitting pushrod tube springs.
Progressively tighten nuts in the **1, 2, 3, 4** sequence at 5.5 Kgm.

easymotoculture

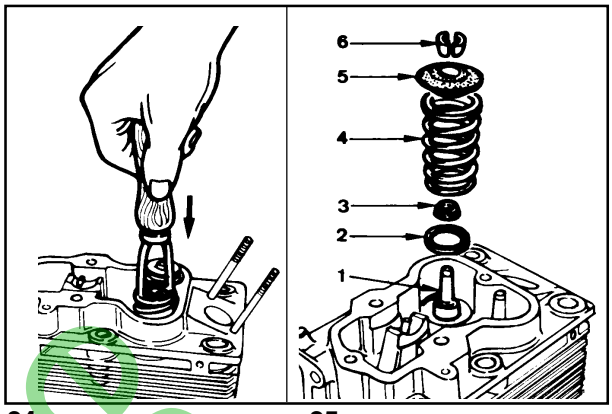

24 25

Vatves

Components:
1 Intake valve
2 Spring seat
3 Valve stem oil seal
4 Spring
5 Retainer
6 Half collets
Te remove half collets firmly press down as shown ìn the figure.

Note: Valve stem oil seal, **3** must be fitted to the intake valve only.

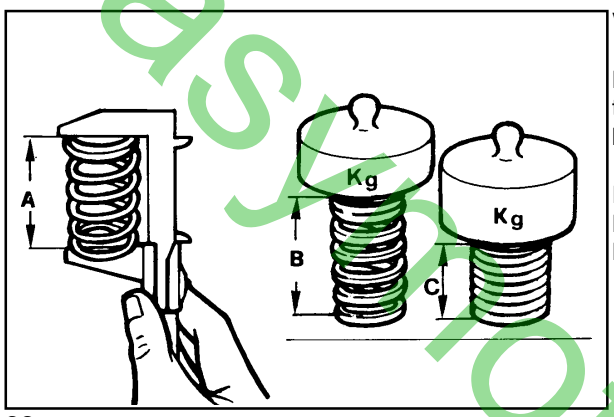

26

Valve springs

Measure free length with a gauge. Using a spring tester check that the spring length under two different loads corresponds to the values below:

Free length **A** = 52 mm
Length **B** compressed by a 21 Kg weight = 34.8 mm
Length **C** compressed by a 32 Kg weight = 25.8 mm.

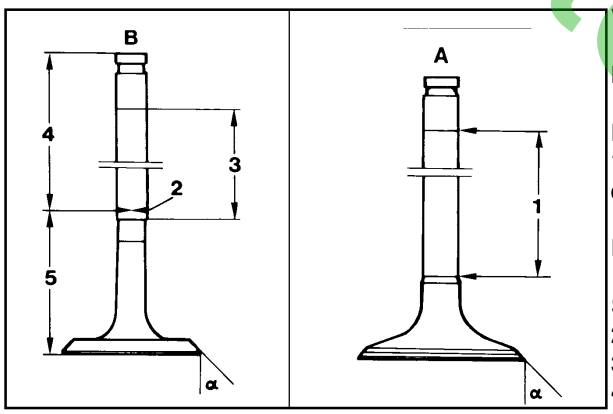

27 28

Valve material

Intake valves A

Material: X 45 Cr Si 8 UNI 3992
1 Chromium-plated portion
α 45°15'÷45°25'

Exhaust valve B

Shaft and head are made of 2 different materials.
2 Welded portion
3 Chromium-plated portion
4 Portion made of X 45 Cr Si 8 UNI 3992
5 Portion made of X 70 Cr Mn Ni N 216 UNI 3992
α 45°15'÷45°25'

easyphotoculture

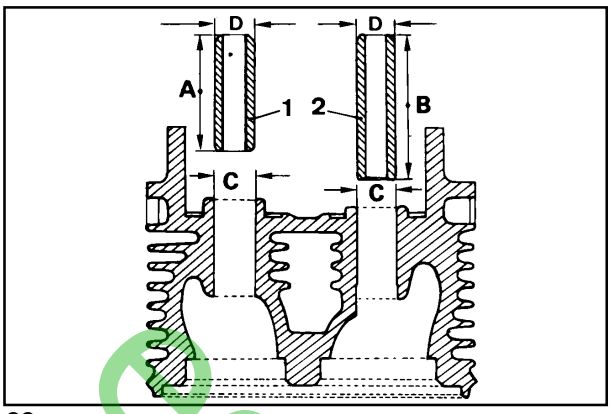

29

Valve guides and cylinder head housings

Intake and exhaust valve guides are both made of phosphoric cast iron.
Components:
1 = Exhaust valve guide
2 = Intake valve guide
Dimensions (mm)
A = 42.00
B = 48.5
C = 14.000÷14.018
D = 14.050÷14.060
Valve guides with outside diameter increased by 0.5 mm are also available; in such cases valve guide bore **C** should also be increased by 0.5 mm.

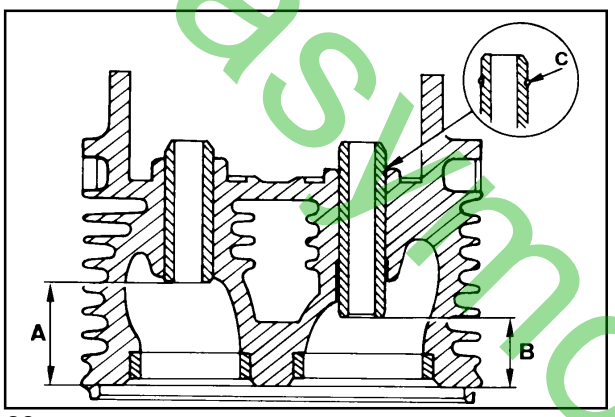

30

Valve guide insertion

Heat cylinder head up to 160÷180°C
Press guides considering the **A** e **B** distances from the head plane.
Dimensions (mm):
A = 30.80÷31.20
B = 24.80÷25.20

Note: If guides are seated with stop ring **C**, first locate the ring in place and then position guides without considering **A** and **B**.

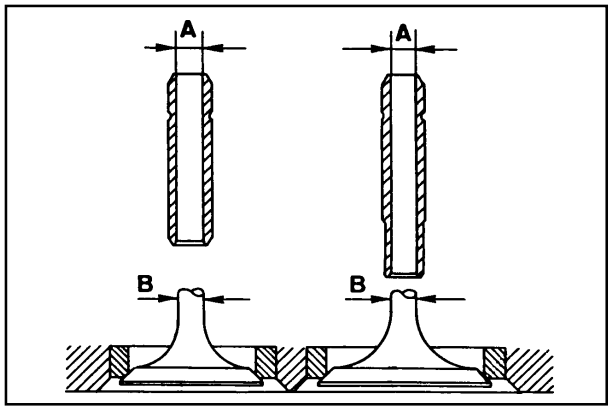

31

Dimensions and clearance between guides and valves (mm)

A = 8.030÷8.045 (with guide in place)
B = 7.985÷8.000
(A-B) = 0.030÷0.060
(A-B) limit value = 0.15

easymotoculture

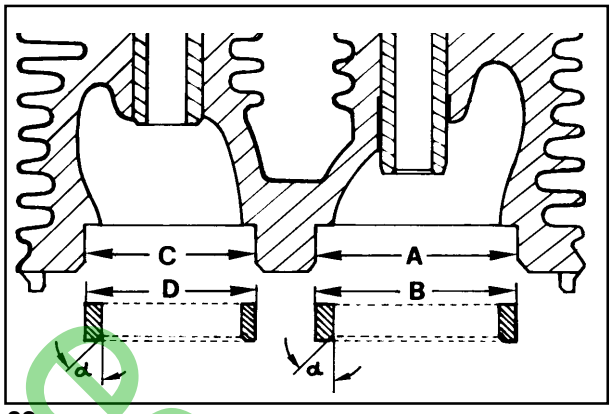

32

Valve seats and housings

Dimensions (mm.):
A = 40.000÷40.016 (intake valve housing dia.)
B = 40.120÷40.140 (intake valve seat dia.)
C = 34.000÷34.016 (exhaust valve housìng dia.)
D = 34.120÷34.140 (exhaust valve seat dia.)
Press valve seats into the housings and cut **a** at 45°.

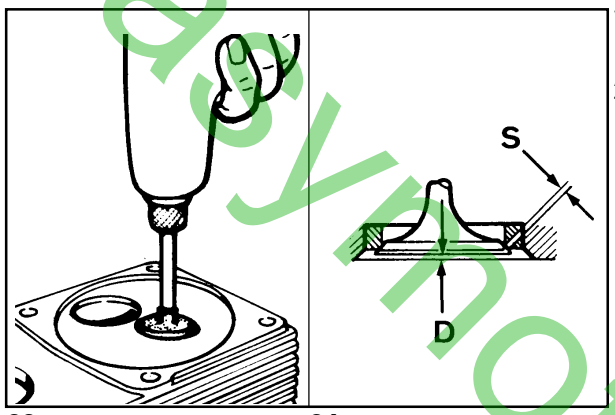

33

34

Valve seat lapping

After cutting, lap valve seats with fine emery paste in oil suspension. The sealing surface **S** should not exceed 2 mm.
Valve recess after grinding **D** = 0.75÷1.25 mm; maximum worn limit 1.65 mm.

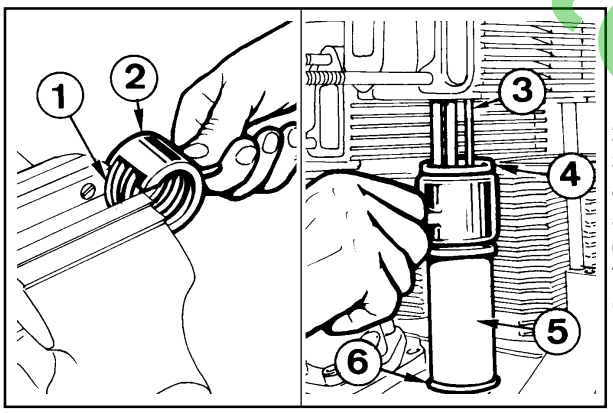

35

36

Pushrod tube spring fitting

Components:
1 Spring
2 Tool Part No 7535-1460-009
3 Rocker arm lubrication tube
4 Gasket
5 Pushrod tube
6 Gasket
To fit spring **1** onto tube **5** first press it inside tool **2** using a vice. Check that tube **3** and gaskets **4** and **6** are well inside their seats.

easynotoculture

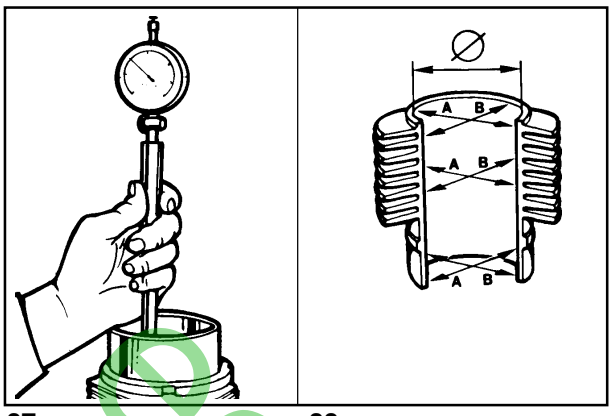

37 38

CYLINDER

Measure diameter sìze between two diametrically opposed points at three different heights.
For 11 LD535-3 Ø = 88.00÷88.03 mm.
For 11 LD625-3 and 11 LD626-3 Ø = 95.00÷95.03 mm.
In case wear exceeds 0.10 mm, bore the cylinder and fit oversize piston and rings.
In case of less wear replace piston rings only.

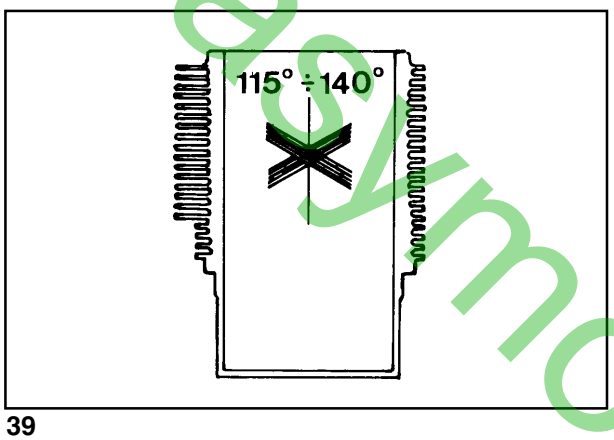

39

Checks and cyiinder roughness

The cylinder should show no blowholes or porosities.
Seal both ends of cylinder and pressurize with compressed air at 4 Bar for 30 secs. Immerse in water and check for leakage.
Fins must be intact.
Cross hatch pattern must range between 115°÷140°: they must be uniform and clear in both directions.
Average roughness should range between 0.5 and 1 µm.

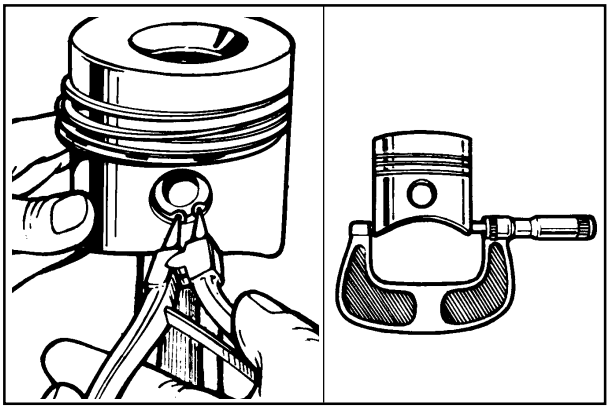

40 41

PISTON

Remove circlips and remove piston pin.
Remove piston rings and clean grooves.
Measure diameter at 2 mm from the bottom of skirt.
For 11 LD535-3 Ø = 87.90÷87.92 mm
For 11 LD625-3, 11 LD626-3 Ø = 94.90÷94.92 mm
In case of diameter wear above 0.05 mm replace piston and piston rings.

Note: Oversize pistons of 0.5 and 1.0 mm are available.

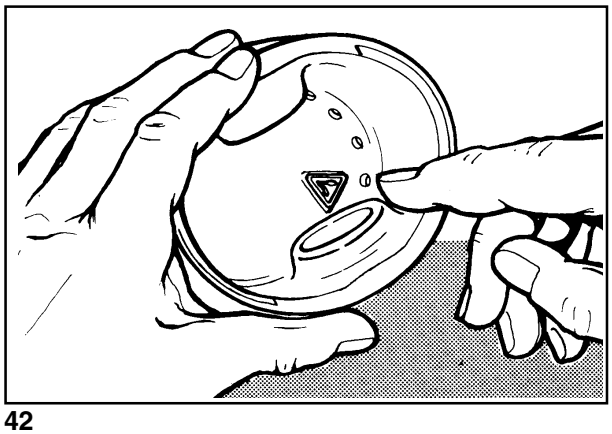

42

Checking that piston is an original part

When replacing the piston or any other engine component always check that the original spare part is available.
The logo confirming that the part is an original one is stamped inside.

easymotoculture

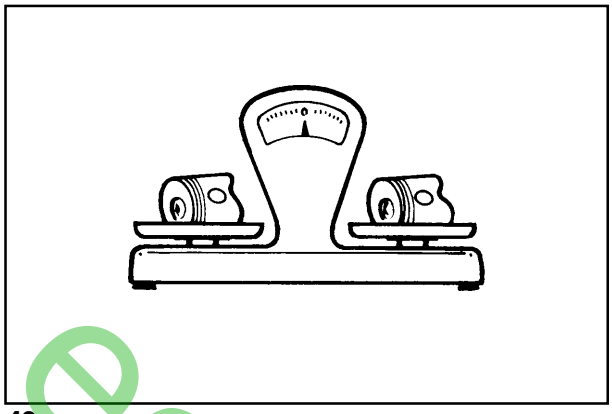

43

Piston weight

Weigh pistons when replacing them in order to avoid unbalance. The difference in weight should not exceed 6 g.

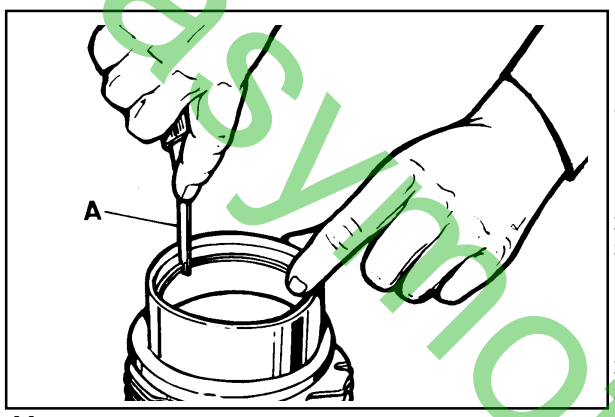

44

Piston rings - End gaps (mm)

Place piston rings squarely into the unworn part of the lower cylinder and measure the end gap.

For 11 LD535-3

1° Chromium-plated ring	**A** = 0.30÷0.50
2° Torsional (internal tapered) ring	**A**= 0.30÷0.50
3° Oil control ring	**A**= 0.25÷0.50

For 11LD625-3 and 11LD626-3

1° Chromium-plated ring	**A**= 0.40÷0.65
2° Torsional (internal tapered) ring	**A**= 0.40÷0.65
3° Oil control ring	**A**= 0.25÷0.50

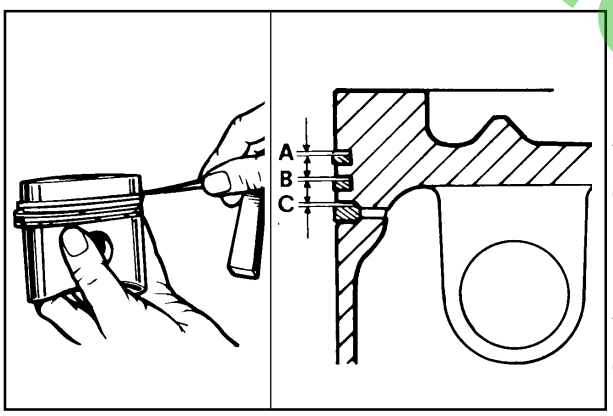

45 46

Pistons rings - Clearance between grooves (mm)

For 11 LD535-3

A = 0.11÷0.15; limit value = 0.25
B = 0.06÷0.10; limit value = 0.18
C = 0.05÷0.10; limit value = 0.18

For 11LD625-3, 11LD626-3

A = 0.070÷0.11; limit value = 0.20
B = 0.05÷0.09; limit value = 0.16
C = 0.04÷0.08; limit value = 0.15

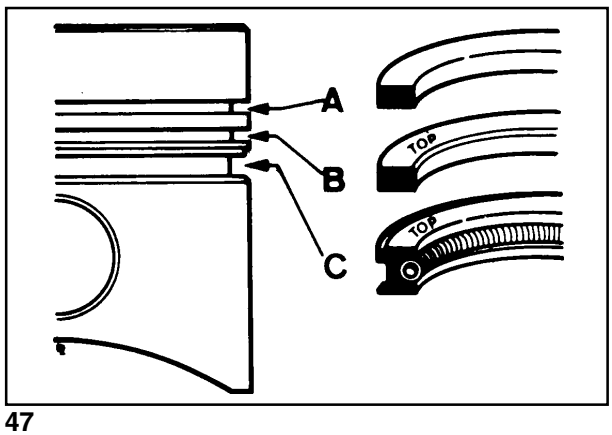

47

Piston rings - Fitting sequence

A = 1° Chromium-plated ring
B = 2° Torsional (internal tapered) ring
C = 3° Oil control ring

Note: Before fitting the piston into the cylinder stagger the ring gaps at 120°.

easymotoculture

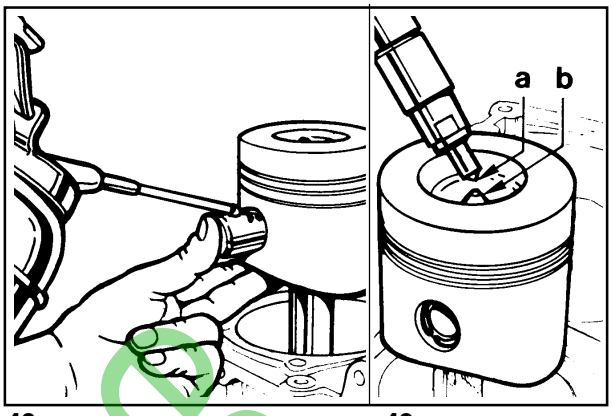

48 49

! Lubricate the following parts with oil before mounting: the piston pin, the piston, the cylinder and the big-end bearing

Piston - Refitting

Connect piston to connecting rod in a way that the combustion chamber center **b** is under nozzle tip **a**.
Lubricate piston pin and introduce it into the piston by exerting pressure with your thumb.
Check that both circlips are well inside their seats.

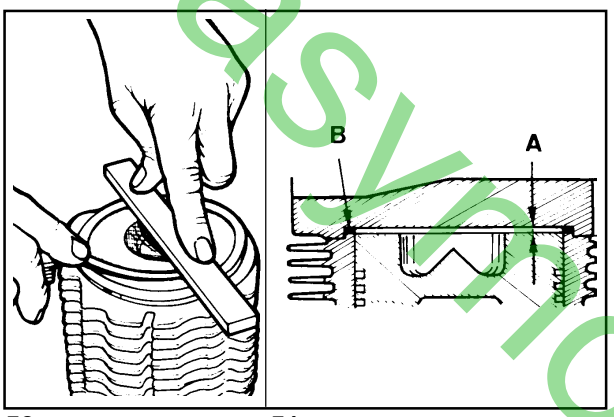

50 51

Piston clearance

A = Piston clearance
B = Copper head gasket
A (0.65÷0.70 mm) is determined by placing the piston at top dead center and measuring with a feeler gauge and straight edge, the distance the piston is below or above the cylinder face. A copper gasket **B** (available in various thicknesses) is then selected to ensure the clearance ìs correct.
Gasket are available in the following thicknesses: 0.45; 0.50; 0.55; 0.60; 0.65; 0.70; 0.75; 0.80; 0.85; 0.90; 0.95; 1.00 mm.

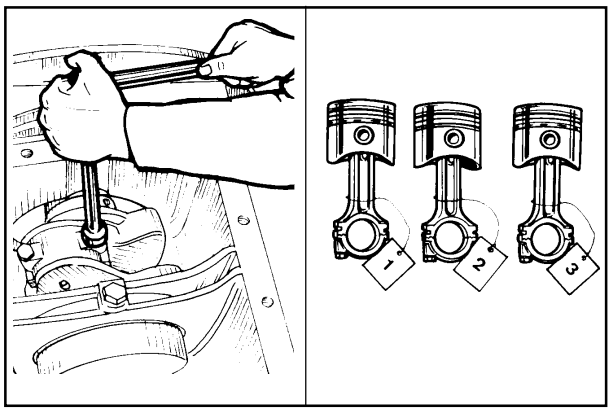

52 53

! When remounting the big-end bearings, remember to thoroughly clean the parts and generously lubricate them to prevent seizure when the engine is started up for the first time

CONNECTING ROD

Remove oil pan and the pick-up tube.
Remove connecting rocis and check as follows,
All connecting rod/piston units should be fitted back into the corresponding cylinders; mark them to avoid mistakes.
See page 31 for specifications as to the tightening of the connecting rod big end bearing.

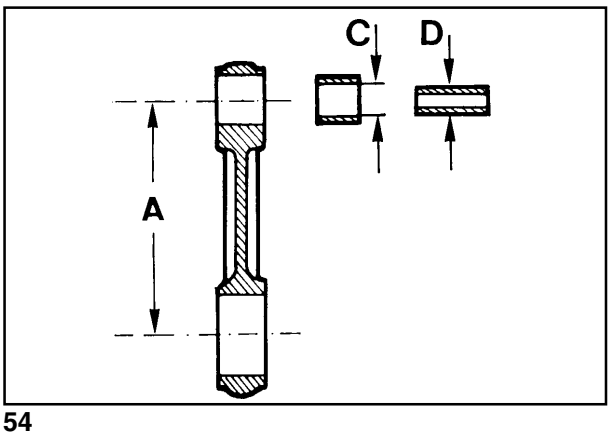

54

Connecting rod small end bearing and pin

Dimensions and clearance (mm)
A = 141.95÷142.05
C = 25.020÷25.030 (with machined bushing in place)
D = 24.995÷25.000
(C-D) = 0.020÷0.035
(C-D) limit value = 0.070

easyphotoculture

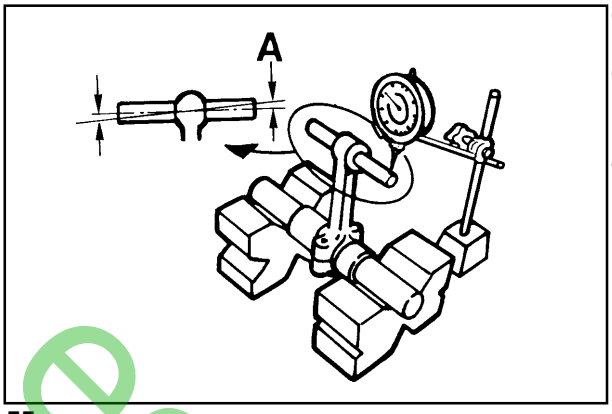

55

Connecting rod alignment

Check alignment of small end and big end bearing bores using fitted mandrels; axial mis-alignment **A** = 0.02 mm; maximum limit 0.05 mm. Moderale warpage may be corrected by gradually working with a press.

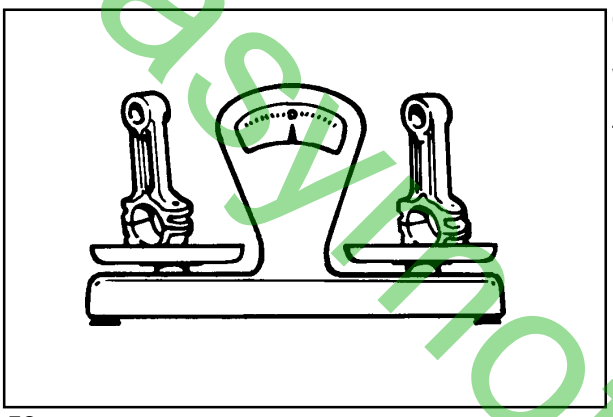

56

Connecting rod weight

Weigh connecting rods when replacing them in order to avoid unbalance.
The difference in weight should not exceed 10 g.

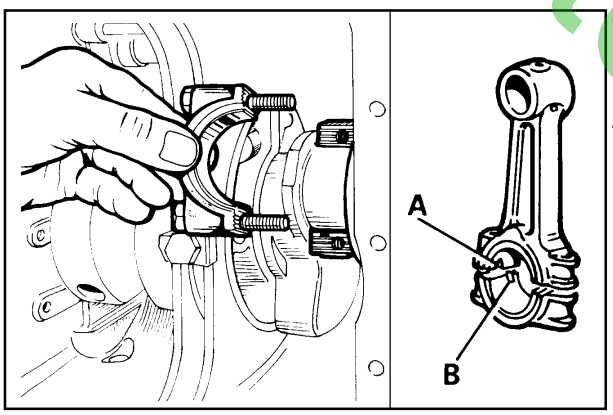

57

58

Connecting rod big end bearing

Both centering notches **A** and **B** must be on the same side when refitting.
Tighten bolts al 4 Kgm.
See page 35 for dimensions.

easymotoculture

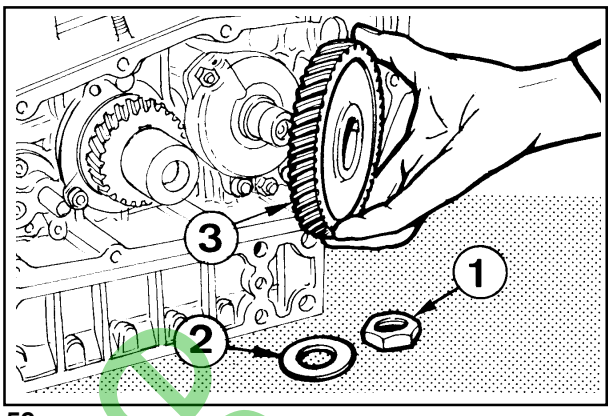

59

Camshaft gear

Remove nut **1** and washer **2**. Then remove camshaft gear **3**.
The cylindrical type of coupling makes gear removal easier since no puller is required.
Tighten nut **1** at 25 Kgm.
See Page 38 for timing.

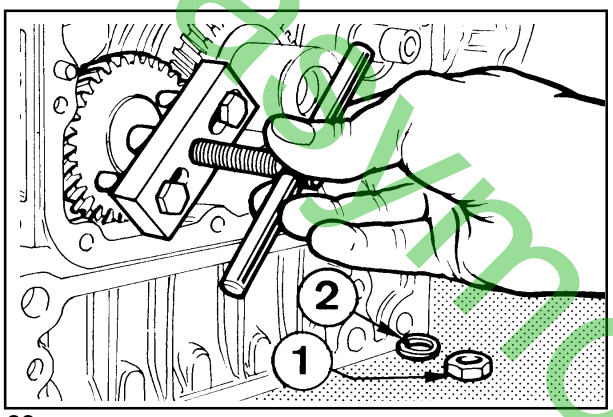

60

Oil pump gear

Remove nut **1** and washer **2**. Then remove oil pump gear using a puller with two M 8x1.25 bolts (length: 60 mm.)
Tighten the nut ai 3.5 Kgm.

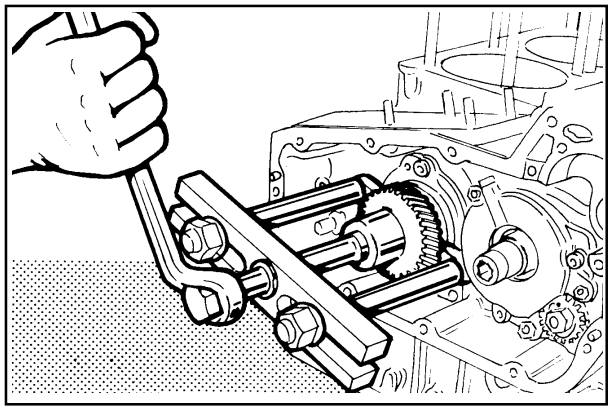

61

Timing gear

The timing gear can be easily pulled out thanks to the cy[indrical type of coupling.
However, if resistance is felt use a bearing puller.

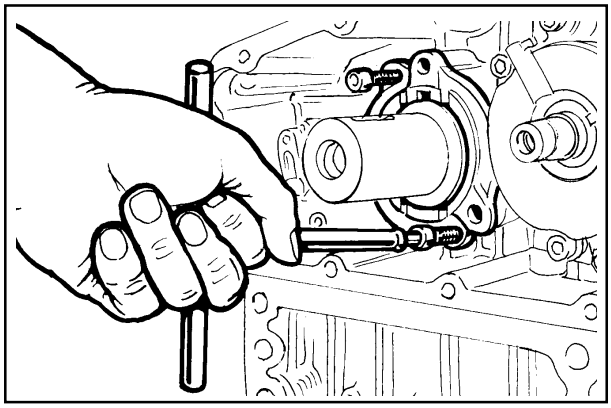

62

Main bearing support, gear side

Remove crankshaft key and thrust bearing.
Loosen the three fixing bolts and remove the main bearing support on gear side using two M 8x1.25 screws with fully threaded length of 60 mm.

Note: To avoid distortion it is not recommended to repiace the bearing bushing.
Complete assemblies of bushing and support are available in standard, 0.25 and 0.50 mm. undersíze configurations as spare parts.
When refitting tighten screws ai 2.5 Kgm.

easymotoculture

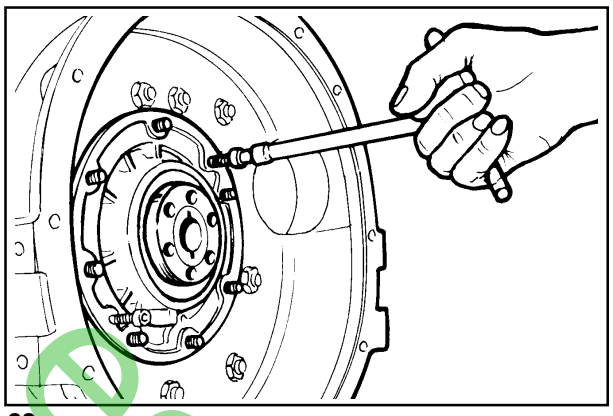

63

Main bearing support, flywheel side

Loosen nuts and extract main bearing support using two M 8x1.25 screws with fully threaded length of 40 mm.
Check oil seal ring and replace if warped, hardened or worn-out.
When refitting tighten nuts at 2.5 Kgm.
See Page 36 for dimensions

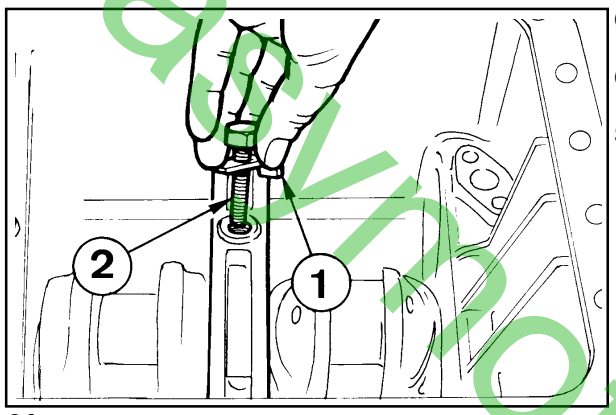

64

CRANKSHAFT

Center main bearing support, locating bolts.

Straighten plate **1** and unscrew bolt **2** before removing crankshaft.

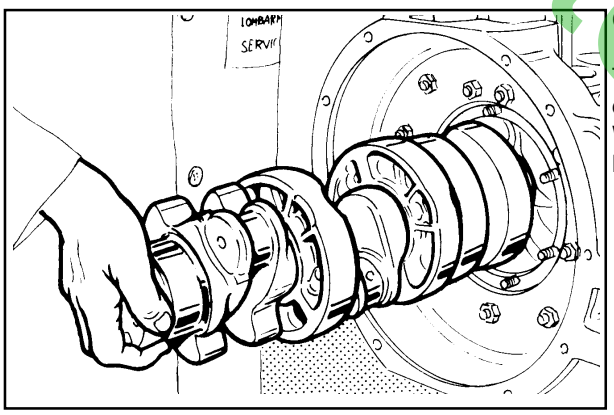

65

Crankshaft removal

To pull out the crankshaft tap lightly on the gear side end using a copperheaded hammer.
When refitting align center main bearing supports so that the locating bolt holes coincide with the crankcase holes.

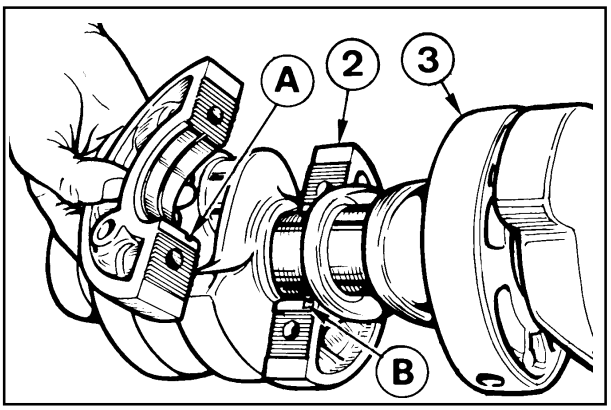

66

Crankshaft center main bearing supports

Main bearing supports **2** and **3** have a different diameter size (see Page 36 for dimensions).
When refitting, both centering notches **A** and **B** must be located on the same side.
Tighten screws at 3 Kgm.

easyMotoculture

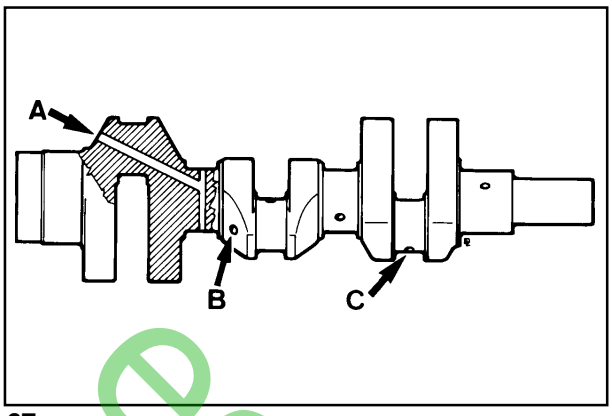

67

During repair operations, when using compressed air, wear eye protection.

Crankshaft lubrication ducts

Remove plugs, clean ducts **A, B** and **C** with a pointed tool and blow in compressed air.
Screw plugs back in place and check for sealing.

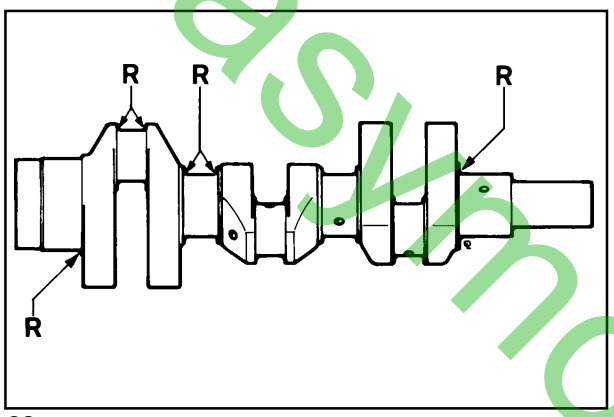

68

Crankshaft journal radius

The radius **R** connecting journal to shoulders is 2.8÷3.2 mm.

Note: When grinding main journals or crank pins restore the **R** value to original specification.

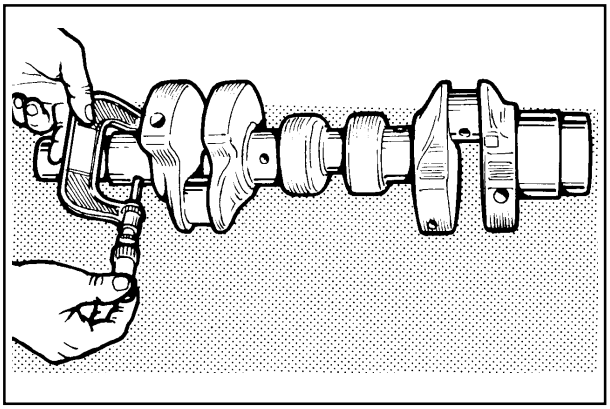

69

Checking main journals and crank pins

Use an outside micrometer gauge.

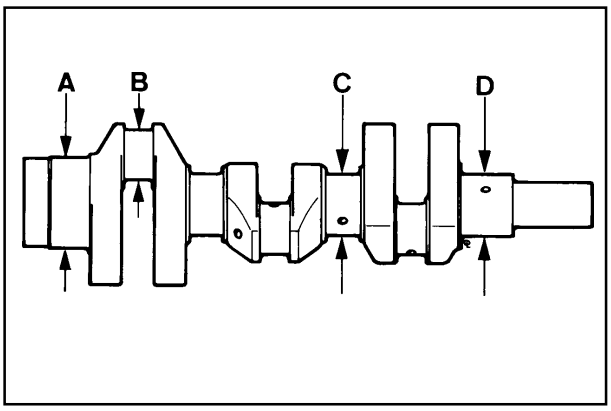

70

Main journal and crank pin diameter (mm)

A = 80.781÷80.800
B = 45.500÷45.316
C = 55.350÷55.370
D = 54.931÷54.950

easymotoculture

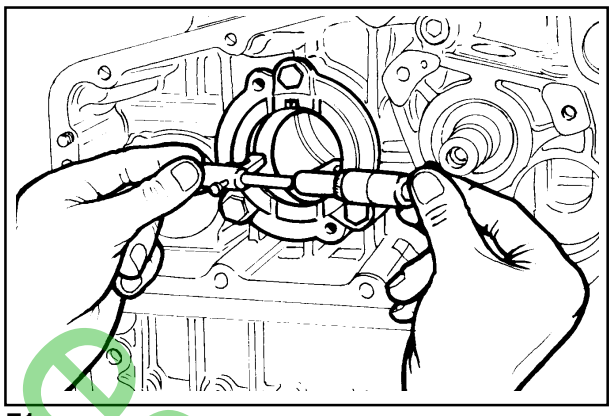

71

Use an inside micrometer to measure the inside diameter of main bearings.

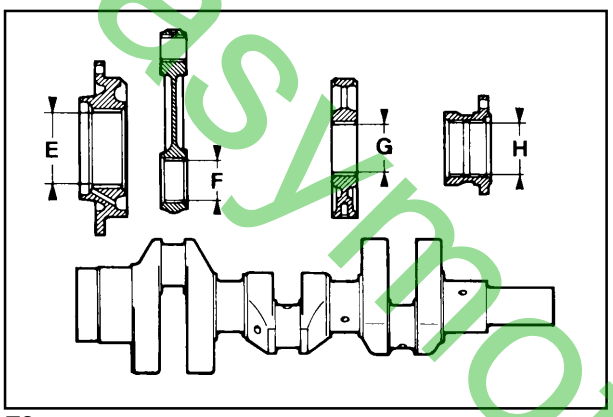

72

Main bearing and connecting rod big end bearing inside diameter

Dimensions (mm):
E = 80.870÷80.890
F = 45.548÷45.578
G = 55.430÷55.460
H = 55.000÷55.020 (see Note on Page 32)
The above dimensions refer to driven in or tightened bearings.

Note: Both main bearings and connecting rod big end bearings are available with inside diameter size measuring 0.25 and 0.50 less than the standard version.

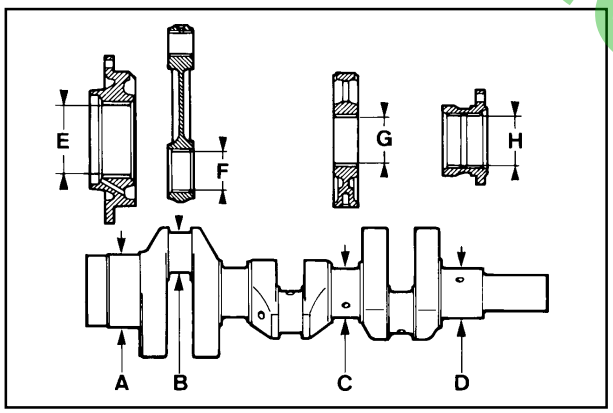

73

Clearance between main journals/crank pins and connecting rod bearings (mm)

(E-A) =0.070÷0.109; limit value = 0.195
(F-S) = 0.032÷0.078; limit value = 0.150
(G-C)=0.060÷0.110; limit value = 0.195
(H-O)=0.050÷0.089; limit value = 0.180

easymotoculture

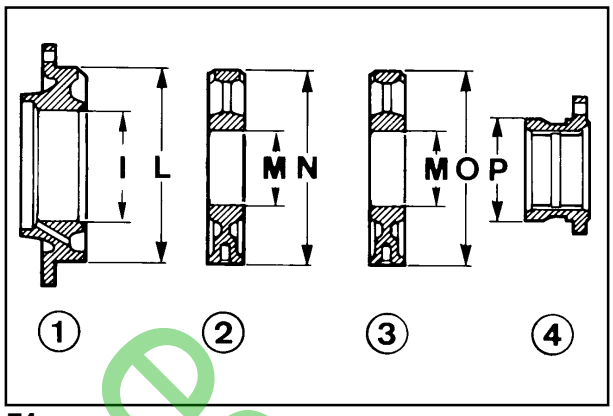

74

Main bearing supports

1 Flywheei side
2 1st central
3 2nd central
4 Gear side

Dimensions (mm)
I = 85.785÷85.815
L= 152.000÷152.020
M= 60.000÷60.020
N = 150.000÷150.020 (with tightened bearing)
0 = 148.000÷148.020 (with tightened bearing)
P= 77.990÷78.010

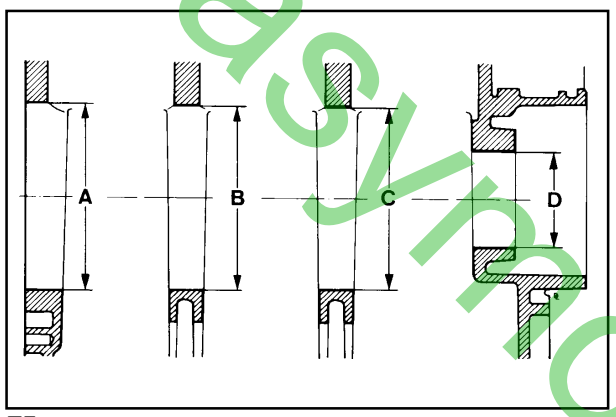

75

Main bearing housings

Dimensions (mm):

A = 152.000÷152.020
B = 150.000÷150.020
C = 148.000÷148.020
D = 78.000÷78.020

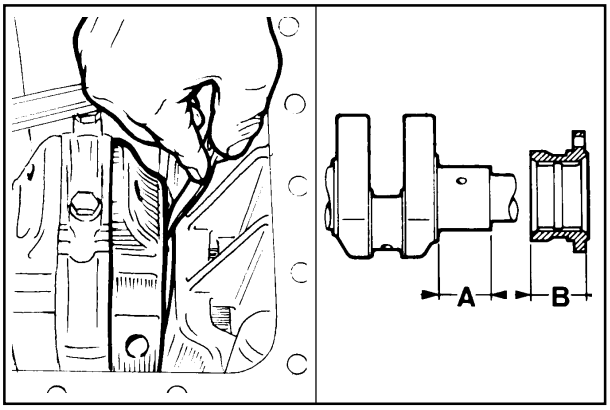

76

77

Crankshaft end play

Dimensions (mm):

A = 48.200÷48.250
B = 47.950÷48.000

Check crankshaft end play after refitting the crankshaft pulley and tightening its nut at 30 Kgm; the crankshaft end play is equal to 0.20 ÷0.30 mm and is not adjustable. If this value cannot be obtained check **A** and **B**, and possibly replace the parts whose size is inadequate.

easymotoculture

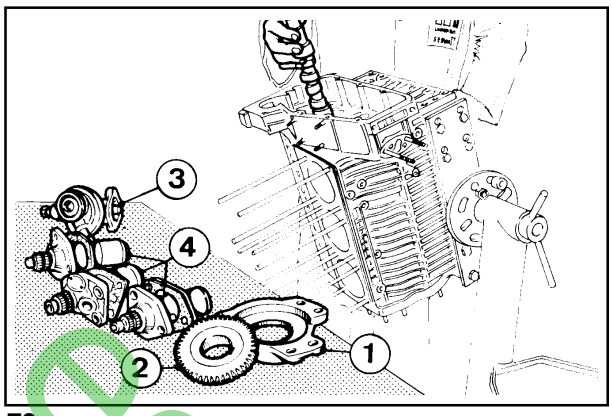

78

CAMSHAFT

Camshaft removal

To pull out the camshaft simply remove bell **1**, gear **2**, fuel feeding pump **3**, injection pumps **4** and tilt the engine; in this position the cam followers is not in contact with the camshaft thus making its removal possible.

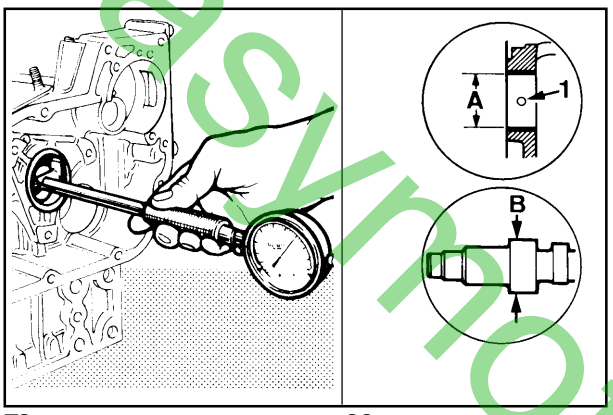

79

80

How to measure camshaft bearing and journal inside diameter
Dimensions (mm):

A = 44.000÷44.025
B = 43.940÷43.960
(A-B) = 0.040÷0.085 limit value = 0.170
Measure **A** with an inside micrometer gauge and **B** with an outside micrometer gauge. When repiacing the bearing make the lubrication hole **1** match with the corresponding crankcase bore.

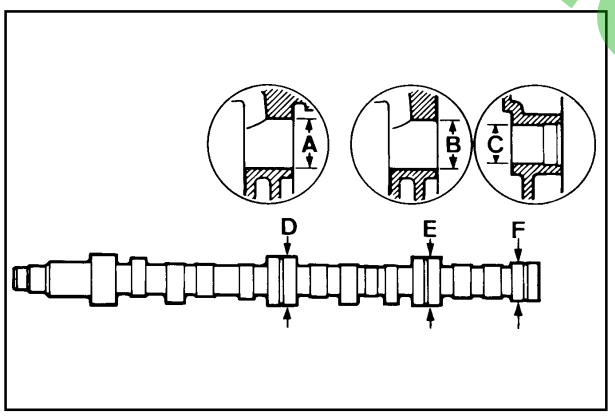

81

Dimensions of camshaft journals and housings (mm)

A = 42.000÷42.025
B = 41.000÷41.025
C = 33.200÷33.220
D = 41.940÷41.960
E = 40.940÷40.960
F = 33.140÷33.160

Clearance (mm)
(A-D) = 0.040÷0.085 limit value = 0.170
(B-E) = 0.040÷0.085 limit value = 0.170
(C-F) = 0.040÷0.080 limit value = 0.160

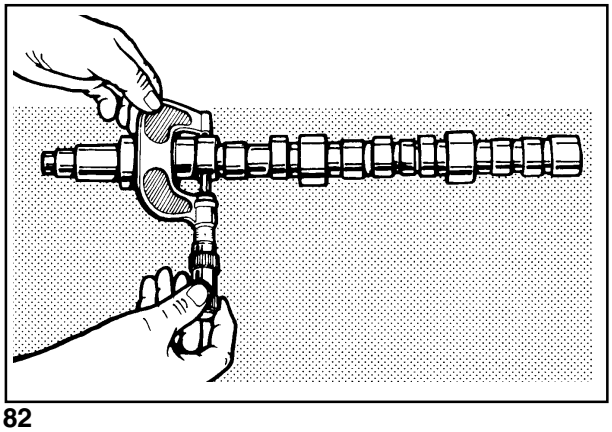

82

Use an outside micrometer gauge to measure camshaft lobe height.

easymotoculture

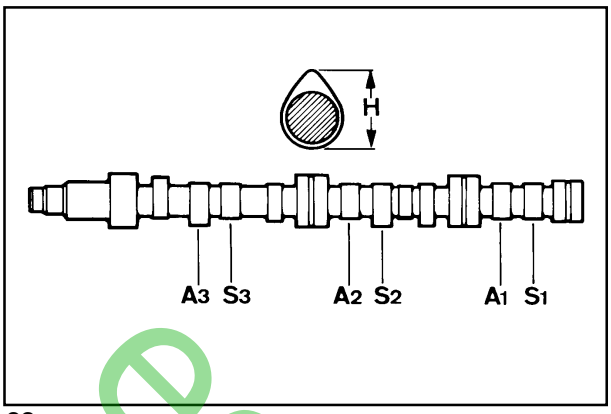

83

Intake/exhaust cam height

A1= 1st cylinder intake cam
S1 = 1st cylinder exhaust cam
A2 = 2nd cylinder intake cam
S2 = 2nd cylinder exhaust cam
A3 = 3rd cylinder intake cam
S3 = 3rd cylinder exhaust cam
H = 33.950÷34.050
Exhaust and intake cams feature the same height H. Replace camshaft if **H** is 0.1 mm below the given value.

Note: Engine 11 LD626-3, in the slow speed version (1500÷2000 r.p.m.) features a camshaft with **H** = 33.765÷33.865 mm.

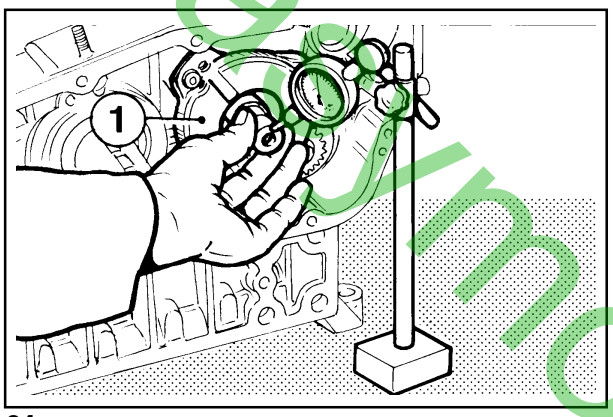

84

Camshaft end play

Check camshaft end play after removing cylinder head, injection pump and fuel feed pump from the engine.
Check that the three cover **1** screws are tightened at 2.5 Kgm.
Place the dial gauge on the camshaft gear outer part; push and pull same gear as required.
Camshaft end play should be 0.15÷0.30 mm.

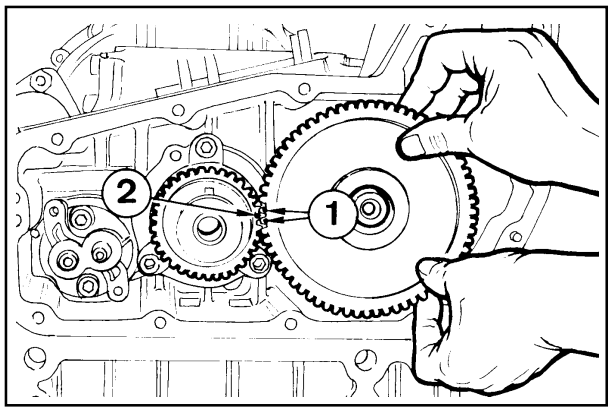

85

Camshaft timing

Fit camshaft gear by making timing mark **2** coincide with timing marks **1**.
Tighten camshaft bolt at 25 Kgm.

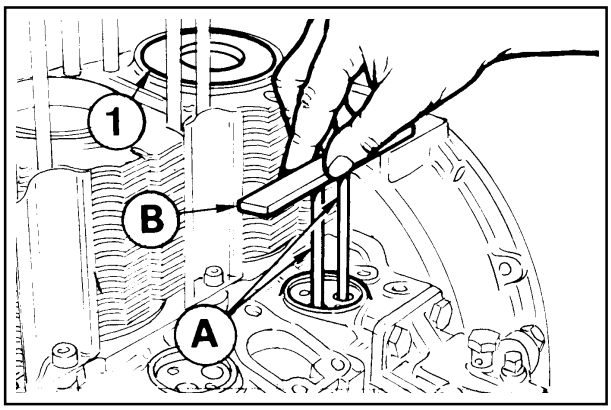

86

Valve timing without considering timing marks

Locate piston 1 (on flywheel side) at the top dead center. Position two small cylinders **A** of the same height onto the tappets.
Rotate camshaft stopping when cylinder 1 tappets are in overlap position (intake open, exhaust closed).
By means of ruler **B** check that tappets are at the same height.

easymotoculture

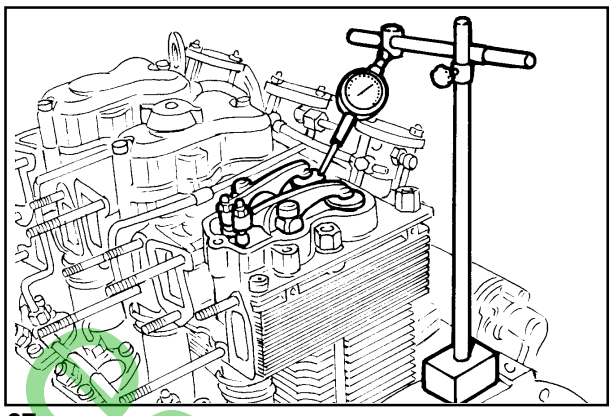

87

Valve timing check

Check valve timing at the crankshaft.
The value shown are checked at the flywheel circumference (with flywheel of 291 mm. diameter each degree corresponds to 2.5 mm).
Set valve clearance at 0.65÷0.70 mm (after checking restore the value al 0.15÷0.20 mm). Set dial gauge on intake valve to a zero value; by rotating the driving shaft according to its direction of rotation you can measure **a** (intake valve opening advance referred to top dead centre S) and **ß** (intake valve closing delay referred to bottom (1) dead centre).

Follow the same procedure for exhaust valves checking y (exhaust valve opening advance) and **8** (exhaust valve closing delay).

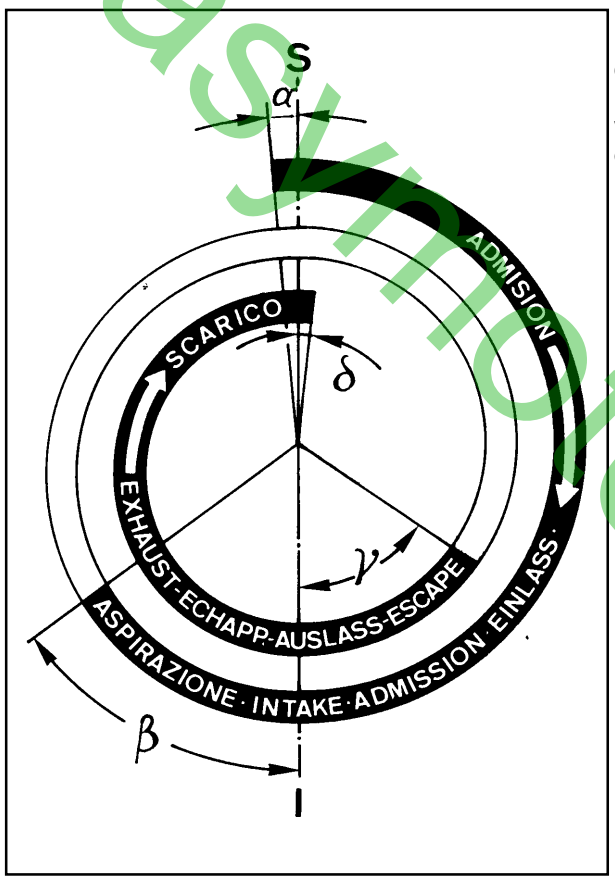

88

ci = 2°
P = 34°,
y = 34°
ò = 2°

easymotoculture

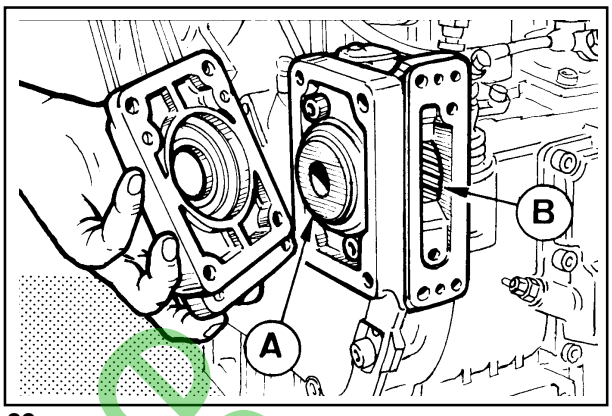

89

Hydraulic pump p.t.o.

A hydraulic pump of group 1 or 2 can be installed on the gear side **A**, 3rd p.t.o.
A group 1 hydraulic pump can be installed at the 4th p.t.o. **B**.

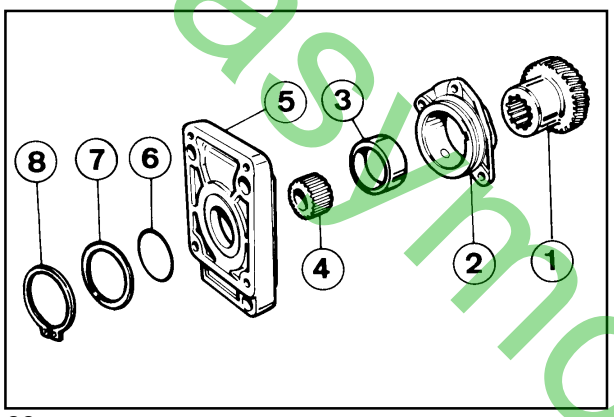

90

Hydraulic pump 3rd p.t.o., group 2

Components:
1 Gear
2 Gear support
3 Bearing
4 Drive
5 Flange
6 Washer
7 Seal ring
8 Circlip
A max torque of 3.96 Kgm can be obtained from this p.t.o.

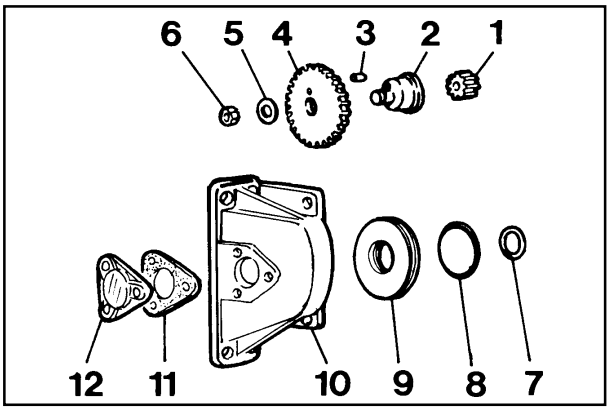

91

Hydraulic pump 4th p.t.o., group 1

Components:

1 Drive	**7** Seal ring
2 Control shaft	**8** Seal ring
3 Pin	**9** Centering ring
4 Gear	**10** Bracket
5 Washer	**11** Gasket
6 Nut	**12** Cover

A max. torque of 2.43 Kgm can be obtained from this p.t.o.

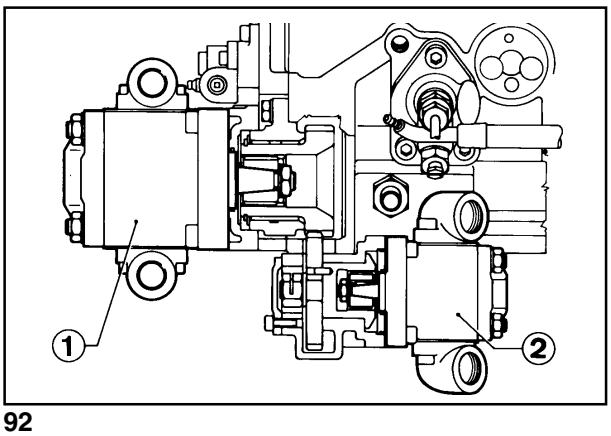

92

Use of 3rd and 4th p.t.o.

1 Hydraulic pump, group 2, mounted at 3rd p.t.o.
2 Hydraulic pump, group 1, mounted at 4th p.t.o.

Total power obtainable from 3rd and 4th plo. is 17.7 HP.
Ratio for both p.t.o. compared to the engine r.p.m. is 1:1.

easymotoculture

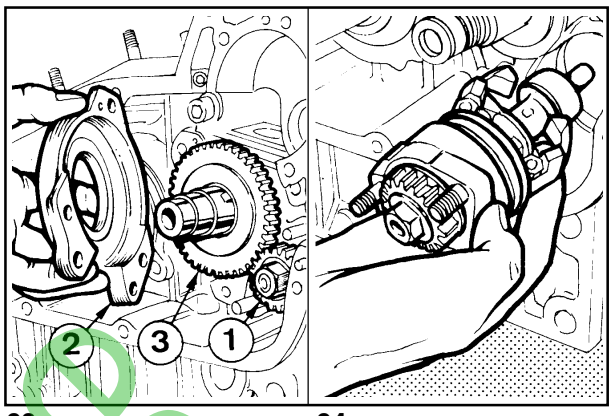

93 94

MECHANICAL SPEED GOVERNOR

The governor (with weights) is housed inside the crankcase and is controlled by a camshaft gear. To remove speed governor **1** remove camshaft bell **2** and speed governor control gear **3**.

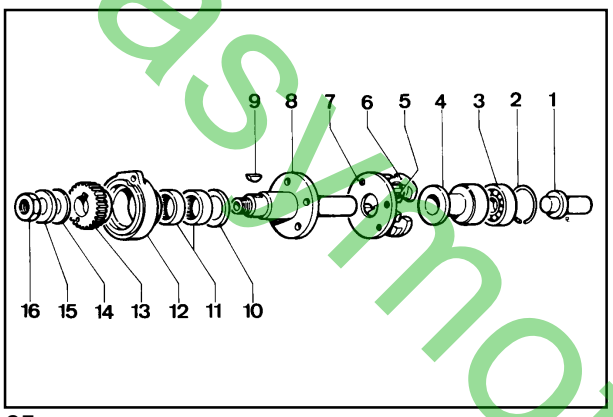

95

Mechanical speed governor components (standard)

1 Drive rod
2 Stop ring
3 Bearing
4 Washer
5 Pin
6 Weights
7 Weight support
8 Shaft
9 Key
10 Thrust washer
11 Bearings
12 Shaft support
13 Gear
14 Spring washer
15 Flat washer
16 Nut

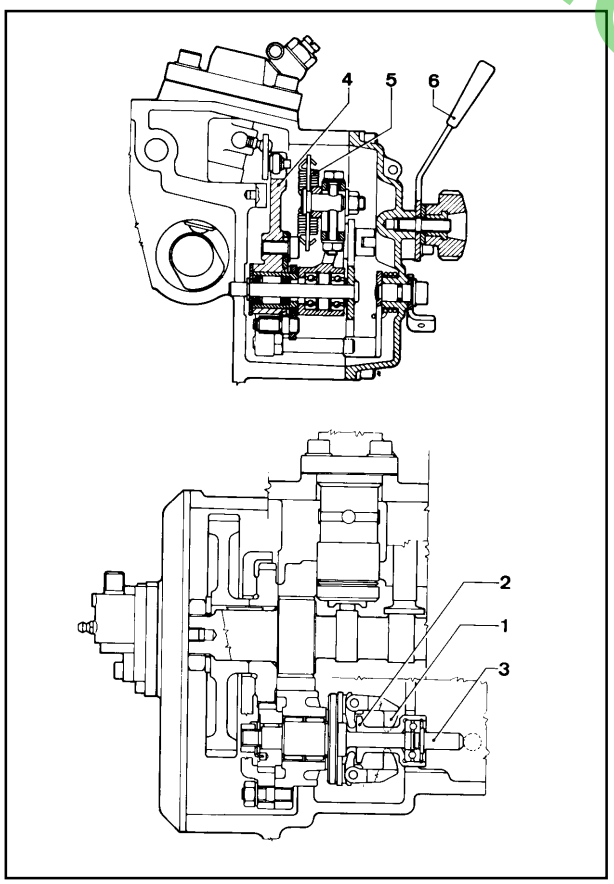

96

Mechanical speed governor operation (standard)

Weights **1** are moved to the periphery by the centrifugal force and thus axially shift the washer **2** and the drive rod **3** which, by means of a linkage, move injection pump control lever **4**.
The governor springs **5** placed under tension by the accelerator control lever **6** offset the weights **1** centrifugal force. Balance between the two forces keeps speed at an almost constant level in spite of load variations.

easymotocoture

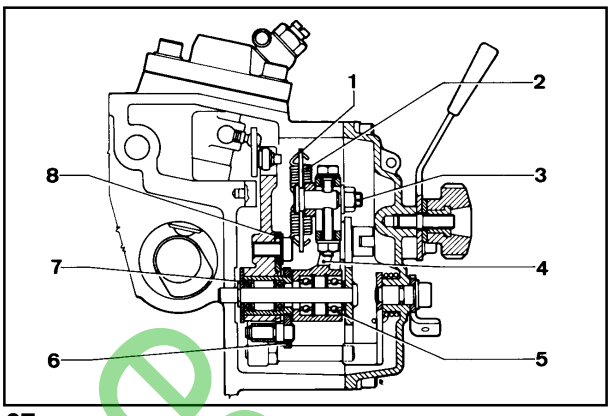

97

Mechanical speed governor components for special generating sets

1 Spring anchoring rocker arm
2 Governor springs
3 Journal
4 Governor control lever
5 Governor control lever ball bearing
6 Lever
7 Bearing
8 Plate

Note: Two types of governor springs **(2)** are available: one for full speed regulation at 1500 r.p.m. and the other for full speed regulation at 1800 r.p.m.; in this case governor weights are heavier.

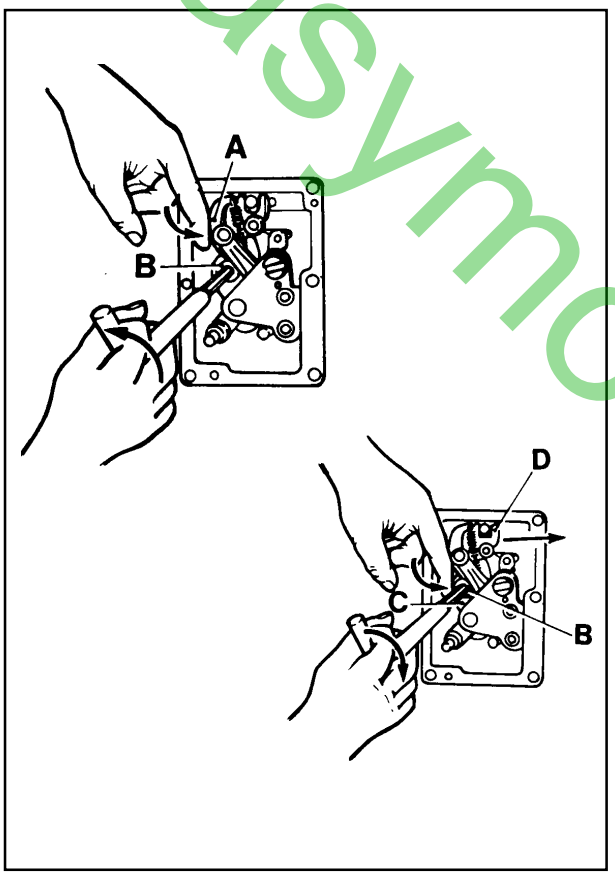

98

Mechanical speed governor setting

Lift finkage **A**.
Loosen screw **B**.
Push lever **C** to the right and check that speed governor weights are closed.
Shift injection pump delivery control yoke **D** to the right (for maximum delivery).
Tighten screw **B**.

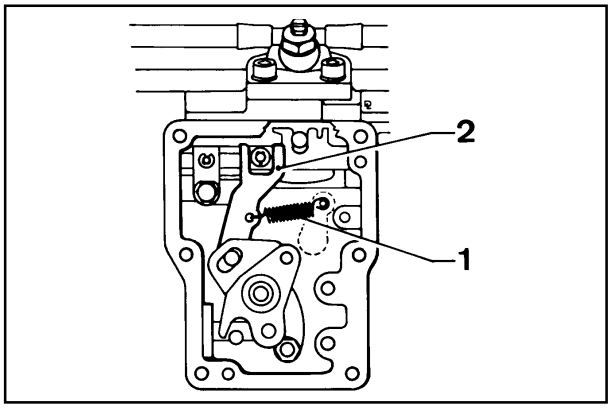

99

Spring for extra fuel supply at starting

The device is operated automatically: when the engine is stopped spring **1** acts on injection pump control yoke **2** providing maximum fuel delivery, until the speed governor starts operating.

easymotoculture

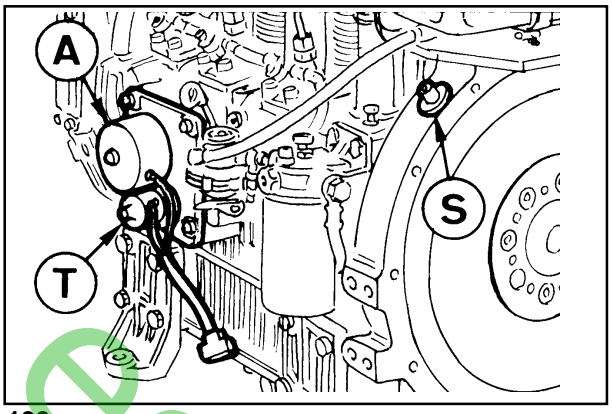

100

ELECTRONIC SPEED GOVERNOR (optional)

A = Actuator
S = r.p.m. sensor
T = Electromagnet

An electronic speed governor can be fitted upon request. The crankcase features a hole for sensor **S** introduction.

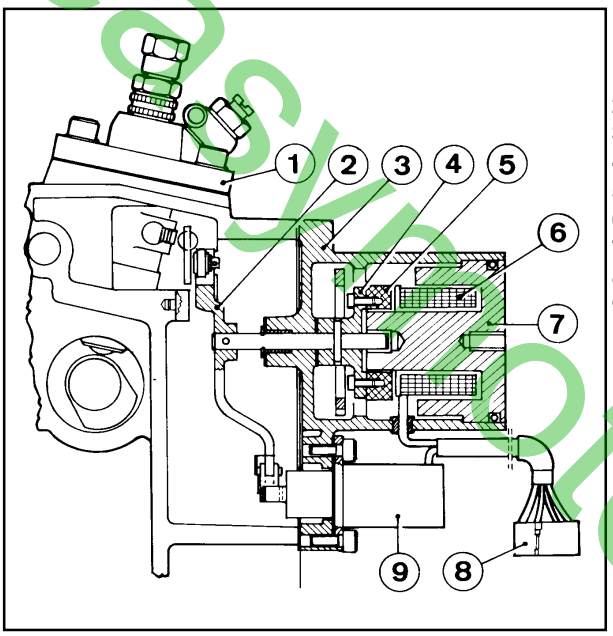

101

Electronic speed governor

1 Injection pump
2 Delivery control lever
3 Actuator A mounting flange
4 Mobile retainer
5 Actuator magnet
6 Stator coils
7 Stator
8 Cable ends for connection to control box E
9 Electromagnet

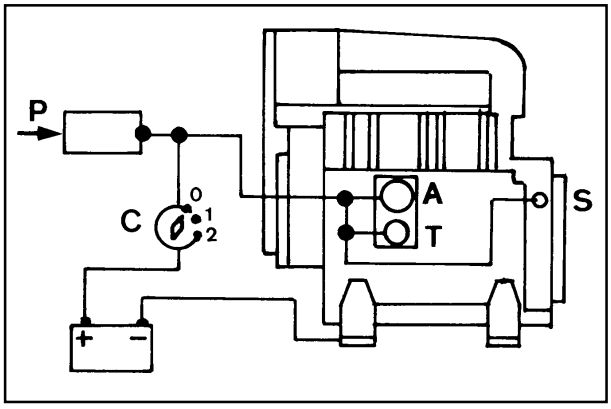

102

Electronic speed governor layout

Components: **A** = actuator; **C** = key; **P** = potentiometer; **T** electromagnet; **S** = sensor

The device consists of an actuator **A** controlling injection pump rack, an r.p.m. sensor **S** and an electromagnet **T** controlling fuel delivery and supplying extra fuel at starting. Control box **E** (see page 44) controls fuel delivery as a function of the load and of the speed set through potentíometer **P**.
The potentiometer can be fitted on the control box or on the control panel **P1** (see page 44).
The whole system makes it possible to keep the engine speed constant independently of the load conditions. It detects speed through the r.p.m. sensor mounted on the crankcase at the ring gear level. As the number of revolutíons changes the device immediately performs the required corrections by means of the actuator acting on the injection pump. Electromagnet **T** responds to max. fuel delivery (fuel flow setting) and (when energized) enables the injection pump rack rod to reach its maximum stroke (extra fuel supplied at starting).

easypartoculture

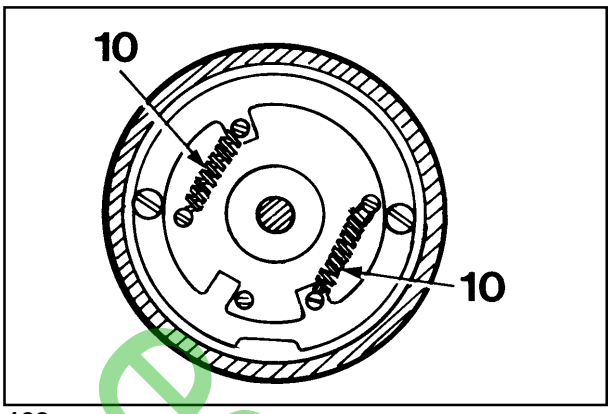

103

Starting with electronic speed governor
(see lay-out on page 43)

In position **0** the engine is not working and no part is energized. The rack rod is in stop position (retained by two springs **10** inside actuator **A**).
By rotating key **C** to position **2** the electromagnet withdraws allowing the rack rod to reach its highest delivery being connected to the actuator at its max. level of energization. When the engine, immediately after starting, reaches 1000 r.p.m, the controller reduces the actuator position, after 1 second switches off the electromagnet **T** and after more 0.5 seconds returns at his normal position with the engine speed set as per position of potentiometer **P1**.

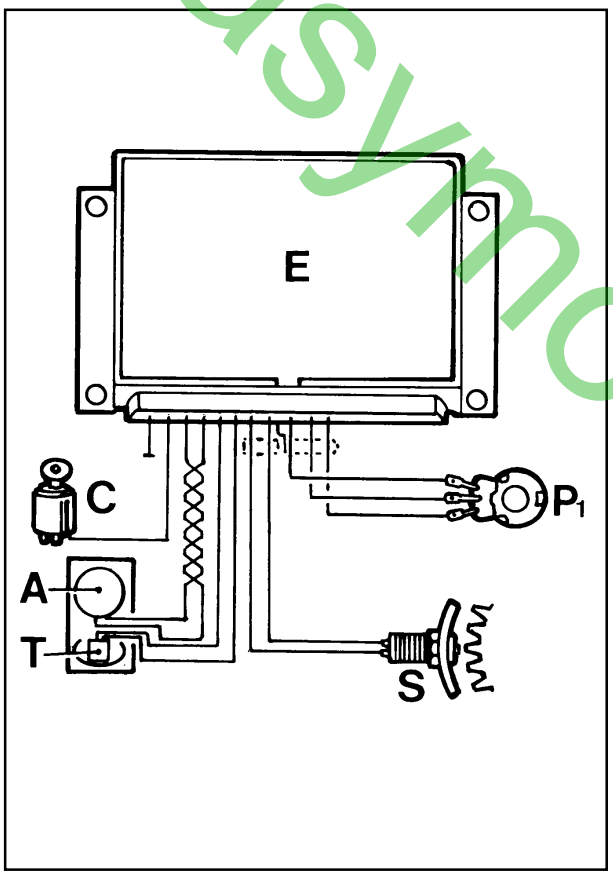

104

Engine running with electronic speed governor

The engine starts running at the pre-set speed.
Potentiometer **P** is located either inside the control box **E** or on control panel **P1**.
In case of an external potentiometer **P1** the engine speed can be set at any point between the idling and full speed in on-load conditions (setting performed on the control box in the test room).
The electronic control box **E** controls actuator **A** (by sending or cutting off the power supply) to keep the speed set through **P1** constant independently of the absorbed load.
Control box **E** prevents the engine from starting (or stops it) in case of no power supply or in case connection with r.p.m. sensor **S** is broken (or short-circuited).

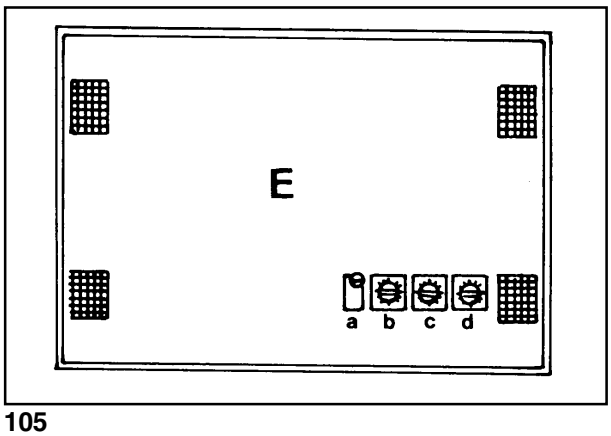

105

Electronic speed governor control box

Control box **E** features four setscrews which must be positioned on the test bed (torque dynamometer) along wilh the engine.
a) Setscrew for speed control (r.p.m.)
b) Setscrew for sensitivity adiustment when the engine is running at full speed.
c) Setscrew tor sensitivity adjustment at low speed.
d) Setscrew for extra fuel release; once correctly positioned, this setscrew is generally sealed.

easymotoculture

The engine can be damaged if allowed to operate with insufficient oil. It is also dangerous to add too much oil because its combustion may lead to a sharp increase in the rotation speed.
Use suitable oil in order to protect the engine.
Nothing more than lubrication oil can influence the performances and life of an engine.
Use of an inferior quality oil or failure to regularly change the oil will increase the risk of piston seizure, will cause the piston rings to jam and will lead to rapid wear on the cylinder liner, the bearings and all other moving parts. Engine life will also be notably reduced.
The oil viscosity must suit the ambient temperature in which the engine operates.

Old engine oil can cause skin cancer if repeatedly left in contact with the skin and for long periods of time. If contact with the oil is unavoidable, you are advised to wash your hands with soap and water as soon as possible.
Dispose of old oil in the correct way as it is highly polluting.

easymotoculture

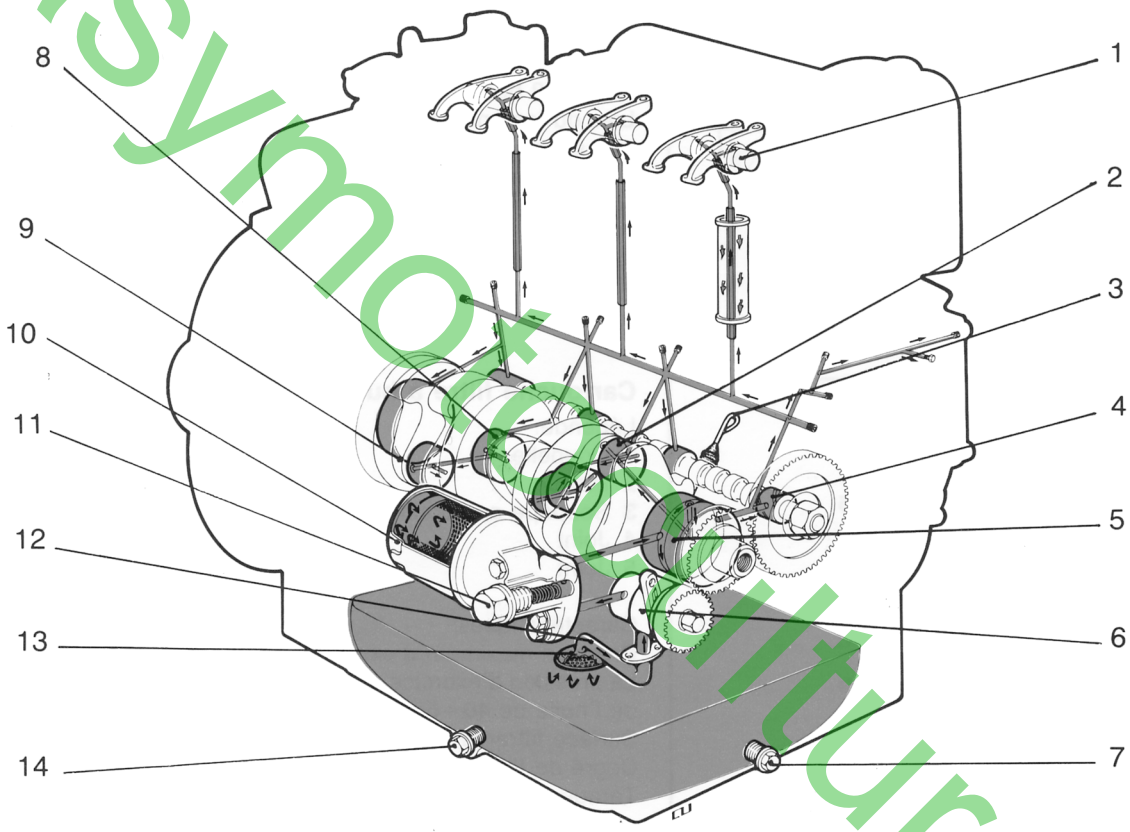

Components:

1) Rocker arm shaft - 2) Connecting rod big end bearìng - 3) Oil dipstick - 4) Camshaft - 5) Crankshaft journal - 6) Oil pump - 7) Drain plug - 8) Crankshaft main journal - 9) Crankshaft - 10) Cartridge filter - 11) Oil pressure relief valves - 12) Pump intake pipe - 13) Internal strainer 14) Drain plug

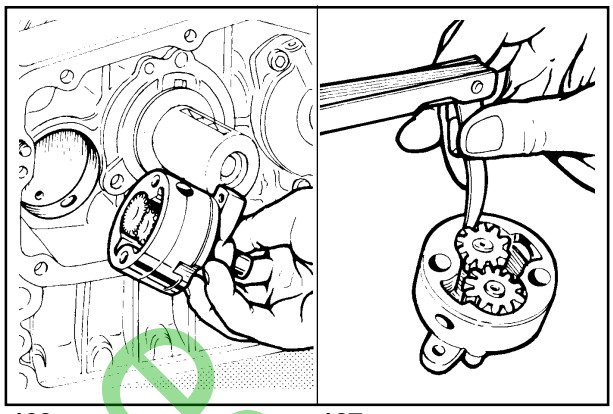

106 107

Oil pump

Check that gear teeth are intact and that clearance between gear edge and pump body is 0.041÷0.053 mm with limit value 0.10 mm. Furthermore check that control shaft is tree to rotate with end float of 0.040÷0.090 mm with limit value of 0.170 mm.
Oil pump delivery at 3000 r.p.m. is 18 liters/min.

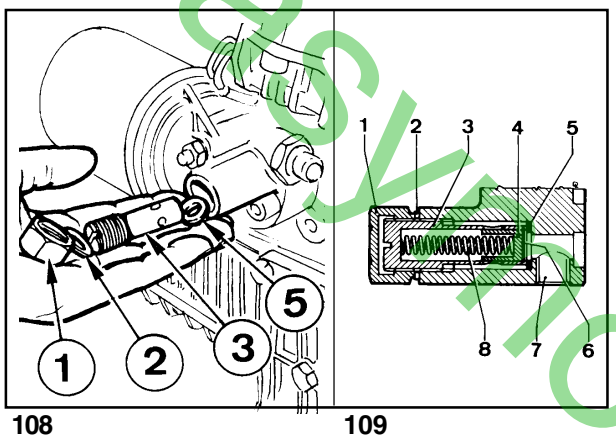

108 109

Oil pressure relief valve

Components:
1) Plug - **2)** Copper gasket - **3)** Bushing - **4)** Piston - **5)** Rubber gasket - **6)** Ring - **7)** Hole for pressure switch connection - **8)** Spring

Note: Blow-by at an oil temperature of 40÷50°C and pressure of 3 bar should be less than 1 l/min.
When refitting screw bushing **3** so that it touches gasket **5**.
Do not tighten excessively since gasket **5** might break causing an oil pressure drop in the system.

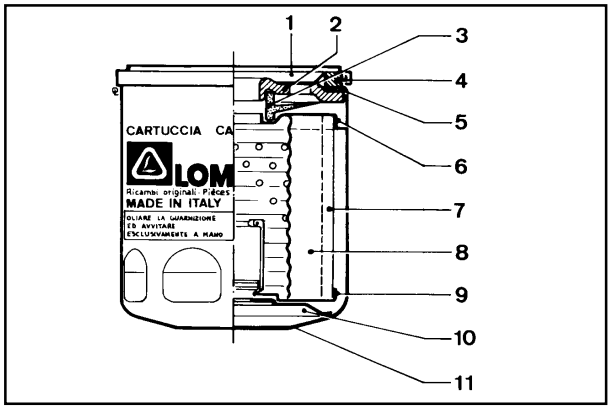

110

Oil filter cartridge

Components:
1 Retainer
2 Plate
3 Valve
4 Gasket
5 Gasket
6 Upper cover
7 Blade
8 Filtering element
9 Assembly
10 Belleville washer
11 Tank

Characteristics:
Max. working pressure 13 bar
Working pressure in a 3000 r.p.m. engine with oil temperature of 40 ÷50°C is 4.5÷5.5 bar.
Filtering area = 955 cm2
Type of filtration 20 µm
By-pass valve opening pressure 1.4÷1.8 bar.

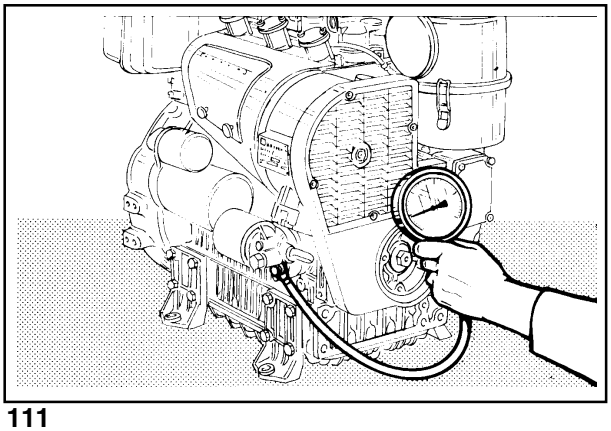

111

Oil pressure check

Once the engine is fitted fill with oil and fuel, connect a 10 bar pressure gauge to the oil filter fitting.
Start the engine and check pressure as a function of the oil temperature (see page. 47).

easymotoculture

112

Oil pressure curve at idling speed

The curve is obtained at the oil filter level with constant engine speed of 1200 r.p.m. in no-load conditions and at a room temperature of + 25° C.
Pressure is given in bar and temperature in centigrades.

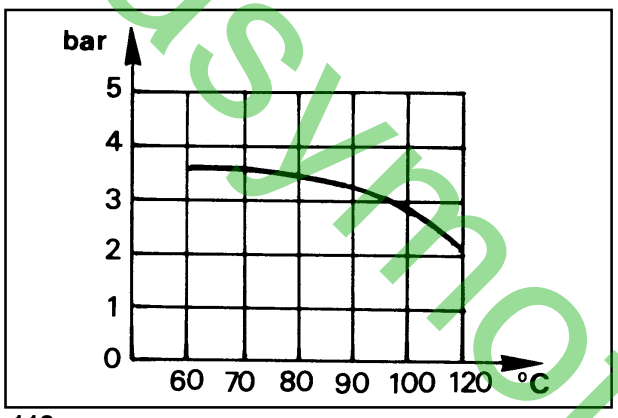

113

Oil pressure curve at full speed

The curve is obtained at the oil filter level with engine working al 3000 r.p.m. al the **N** power. Room temperature is +25°C.
Lube oil peak temperature should be below 120°C for engines without oil cooler and below 110°C for engines with oil cooler.
Pressure is given in bar and temperature in centigrades.

easymotoculture

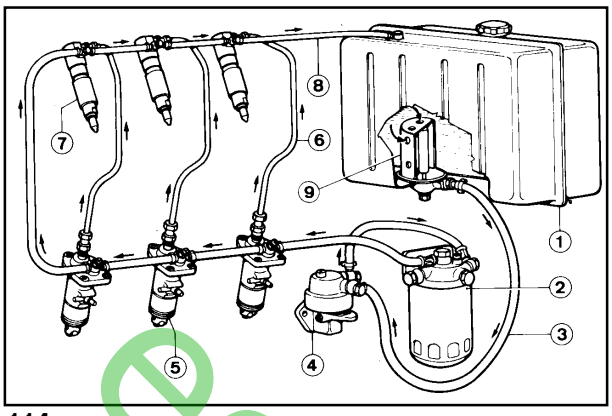

114

Fuel feeding/injection circuit

Components:
1 Tank
2 Filter
3 Fuel feeding tube
4 Fuel feeding pump
5 Injection pump
6 Injection line
7 Injector
8 Injector leak off line and self bleeding system
9 Bowl

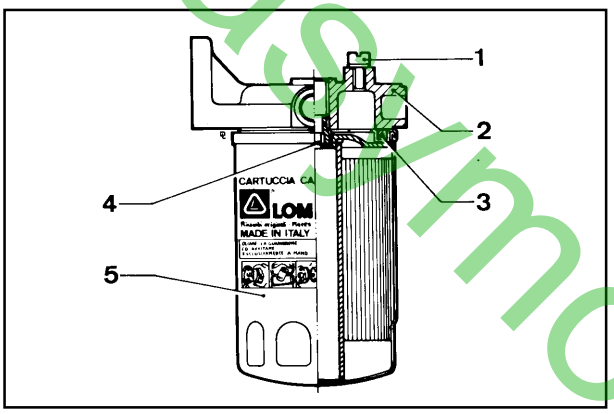

115

Fuel fliter

Components:
1 Bleeder
2 Cap
3 Seal element
4 Union
5 Cartridge

Cartridge characteristics:
Filtering paper PF 904
Filtering area 5000 cm2
Degree of filtrafion = 2÷3 µm
Max.,working pressure 4 bar
See page 16 for periodical maintenance details.

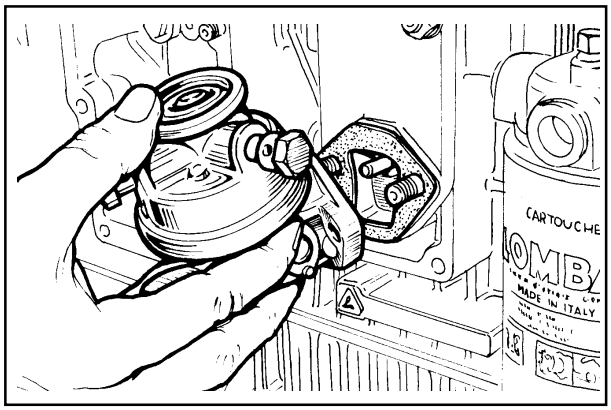

116

Fuel feeding pump

The fuel feeding pump is of the diaphgragm type operated by a camshaft eccentric through a drive rod. It features an external lever for manual operation.

Characteristics: when the control eccentric rotates at 1500 r.p.m. minimum delivery is 64 l/h while self-regulation pressure is 4÷5 m water column.

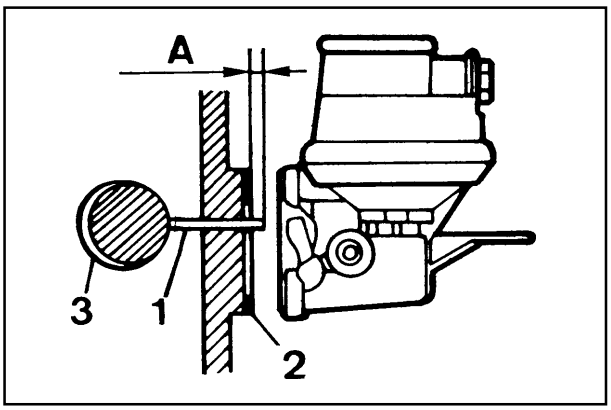

117

Fuel feeding pump drive rod protrusion

Components:
1 Drive rod
2 Gasket
3 Camshaft eccentric
Drive rod **A** protrudes 0.8-1.2 mm from the crankcase; it can be adjusted by means of gaskets.
Gaskets are supplied in the following thicknesses: 0.50, 0.80 and 1.0 mm.

Note: This operation must be carried out when drive rod **1** is not on camshaft eccentric **3.**

easymotoculture

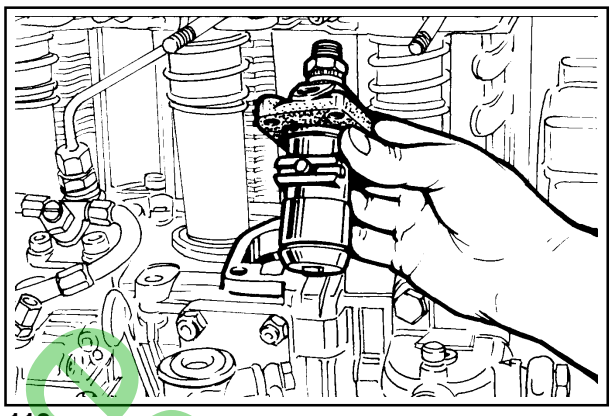

118

INJECTION PUMP

The Bosch injection system consists of three pumps each feeding one cylinder.
The pumps mounted on the crankcase, corresponding to their proper cylinder, are directly operated by the camshaft.

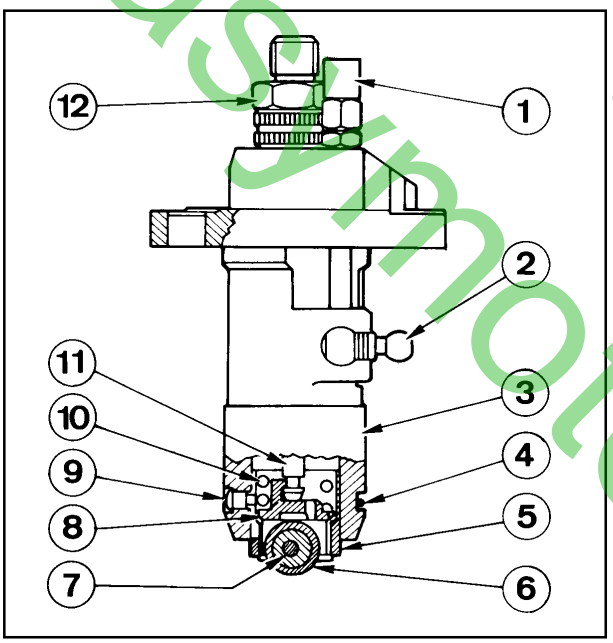

119

Injection pump type LOMBARDINI - OMAP
For 11LD625-3 and 11LD626-3

Components:
1 Rack rod lock
2 Rack rod
3 Pump body
4 Tappet stop ring
5 Tappet body
6 External roller
7 Internal roller
8 Retainer
9 Stop pin
10 Spring
11 Plunger
12 Delivery union

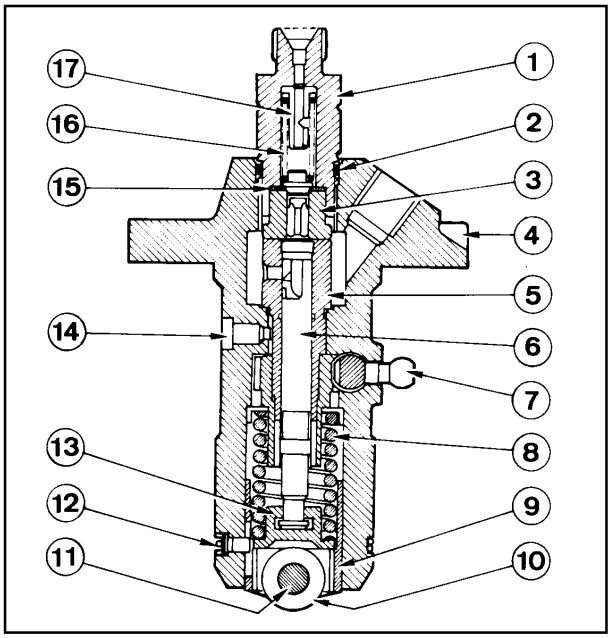

120

Injection pump type Bosch
For 11 LD535-3 and 11 LD625-3

1 Delivery union
2 Rubber ring
3 Delivery valve
4 Pump body
5 Piston
6 Plunger
7 Rack rod
8 Spring
9 Tappet body
10 Roller
11 Journal
12 Pin
13 Spring retainer
14 Eccentric
15 Copper gasket
16 Spring
17 Filler

easymotoculture

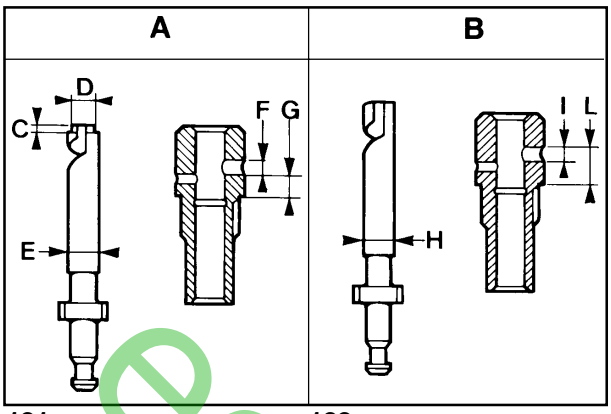

121 122

Plunger

A = For injection pump type LOMBARDINI-OMAP mounted on 11 LD626-3
B = For injection pumps type Bosch and LOMBARDINI-OMAP mounted on 11 LD535-3 and 11 LD625-3.

Dimensions (mm):
C = 1.000÷1.100
D = 7.445÷7.455
E = 7.500
F = 3.000÷3.025
G = 7.225÷7.275
H = 7.000
I = 3.000
L = 10.250

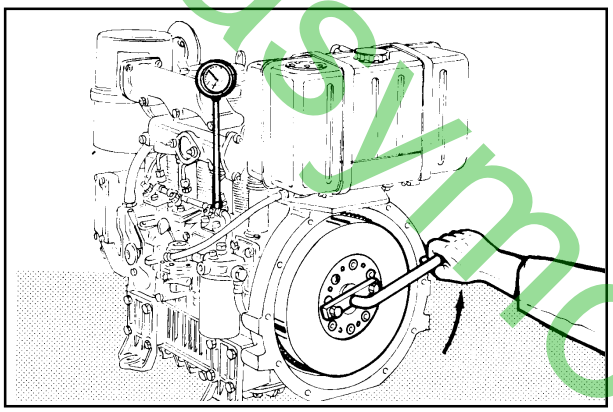

123

How to check plunger and barrel for internal leakage

This operation is only diagnostic since pressure changes depend on the pumping speed.
Connect the delivery union with a 600 bar pressure gauge with safety valve.
Adjust rack rod at half-stroke. Turn flywheel according to its direction so that the plunger puts the circuit under pressure.
Replace plunger if the displayed pressure is below 300 bar.
Repeat the same operation for the other plunger.

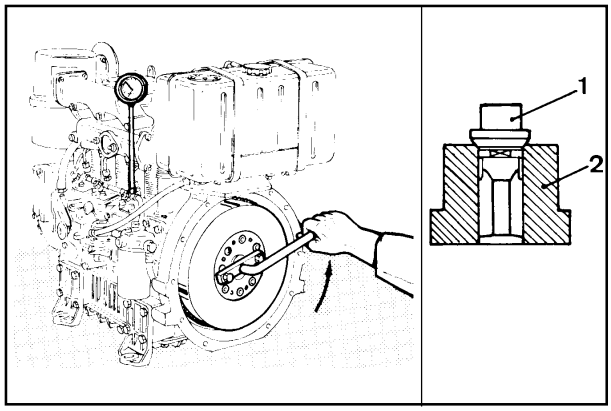

124 125

How to check injection pump delivery valve sealing

Components:
1 Valve
2 Seat

Adjust pump rack at half-stroke. Turn flywheel according to its direction of rotation so that the plunger puts the circuit under pressure. During this operation the displayed pressure will gradually reach a peak followed by a sudden drop which corresponds to valve closing. Pressure drop should be 30÷50 bar. Replace the valve if pressure drop is below this value. Repeat the same operation for the other two pumps.

easymotocultare

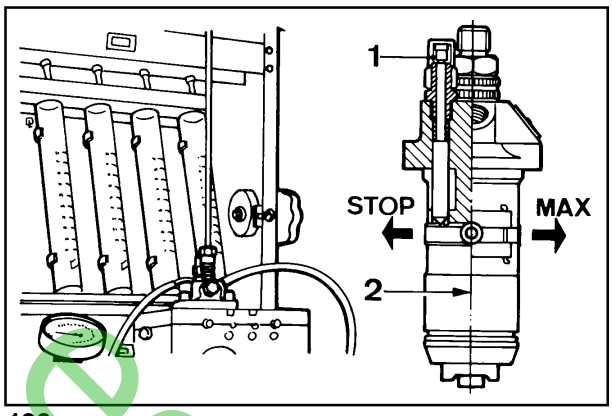

126

Test data for injection pump delivery at the test bed - Pump type LOMBARDINI-OMAP

1 Rack rod lock to be removed after pump fitting to the engine
2 Injection pump axis

Test data

Control rod max. force	Rod stroke from pump axis + towards max. - towards stop	Camshaft r.P.M.	Delivery
Newton	mm	r.p.m.	mm³/stroke
0,45	- 2	500	3÷5 white mark 5÷7 green mark 7÷8 blue mark
	- 2	1500	27,5÷30,5
	max	150	90÷100

The above test data refer to pump with plunger dia. of 7.500 mm.

Note: All pumps are tested and set in order to obtain the same delivery at full speed.
After the tests carried out at idle speed pumps are subdivided into three ciasses marked with a white, green or blue reference mark. These reference marks are very clearly painted on the upper pump body. In case of pump replacement check that all three injection pump reference marks are of the same colour (see page 52).

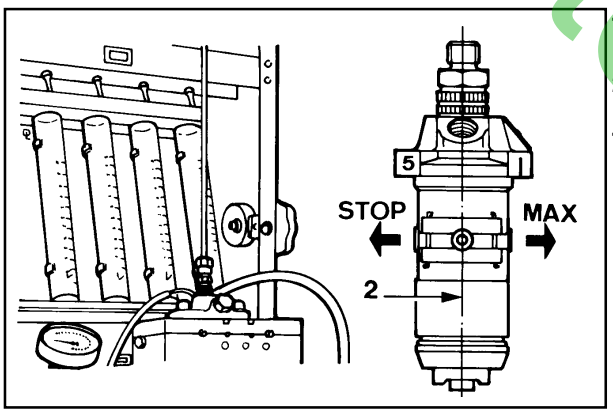

127

Test data for injection pump delivery at the test bed - Pump type Bosch
2 Injection pump axis

Test data

Control rod max. force	Rod stroke from pump axis + towards max - towards stop	Camshaft r.p.m.	Delivery
Newton	mm	r.p.m.	mm³/stroke
0,45	- 2,6	500	7÷10
	- 2,1	1500	25÷29
	max	150	90÷100

Note: Plunger diameter size: 7.000 mm.

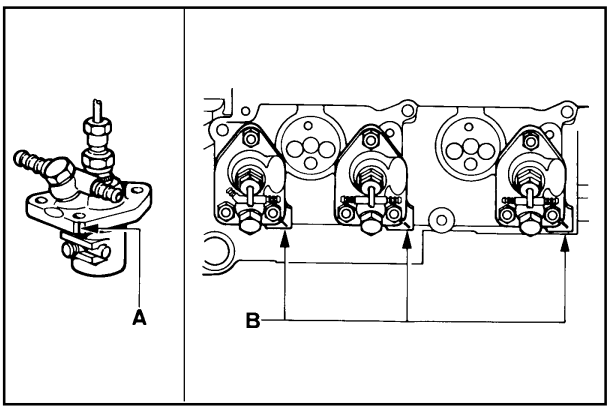

128 129

Bosch injection pump replacement - Reference mark on delivery side

A = Delivery reference mark on injection pump
B = Delivery reference marks on crankcase.

In case of injection pump replacement apart from the instructions below align mark **A** on the injection pump with mark **B** on the crankcase.

easymotoculture

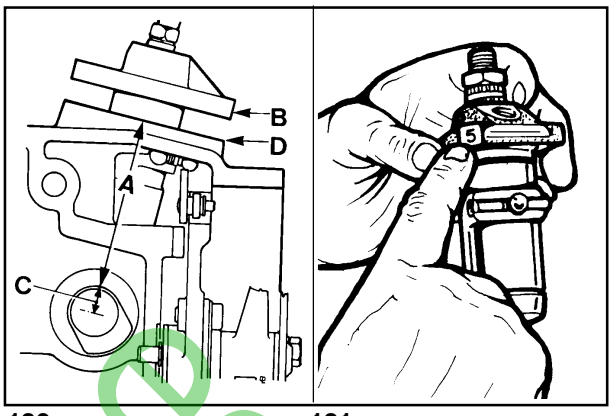

130 131

Bosch Injection Pump replacement - Shim reference number

A = 82.80 mm
B = Shim reterence number iocation
C = Injection cam radius
D = Injection pump support

The number of shims (in tenths of mm) which must be added to or removed from underneath the injection pump at the time of replacement is given at **B**.
Example: if the number stamped on the old pump is **5** and the number stamped on the new one is **6** add a 0.1 mm shim; if the opposite situation occurs remove as many shims as required. If the numbers are the same do not remove or add any shim.
Whern replacing the crankcase or the camshaft preserve the same distance **A** between **D**, injection pump support, and **C**, injection cam radius; add shims on **D** to obtain the right **A** value if required.

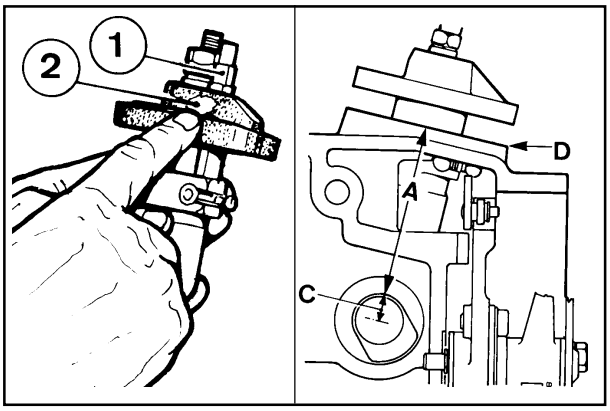

132 133

LOMBARDINI-OMAP injection pump replacement

1 Rack rod lock
2 White, green or blue reference mark
A = 82.80 mm
C = Injection cam radius
D = Injection pump support

Whe replacing this type of injection pump check that the new one has a reference mark of the same colour as the old one. The reference marks of ali three injection pumps must be of the same colour.
Replace as follows:
Fit pump into the crankcase and tighten screws at 2.5 Kgm.
Remove lock **1** and check that rack rod is free to move.
If pump removal is required fit lock **1** to its original position: the rack i rod centre should coincide with the pump axis (see page 51).
When replacing the crankcase or the camshaft preserve the same distance **A** between **D**, injection pump support, and **C**, injection cam radius; add shims on **D** to obtain the right **A** value if required.

easymotoculture

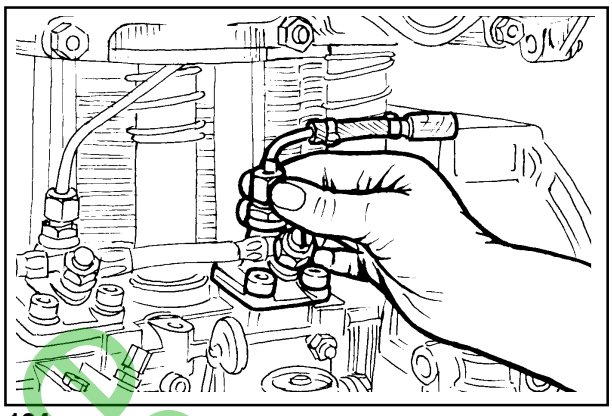

134

(STATIC) INJECTION TIMING

Disconnect injection line on cylinder **1** making sure not to loosen the pump delivery union. Attach the timing tool shown below.

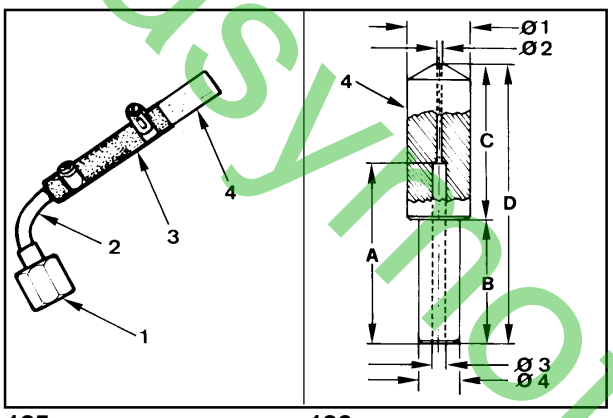

135 136

Injection timing checking device

Components:
1 Union
2 Tube
3 Sleeve
4 Transparent body, serial No. 7271-9727-003

This device allows for immediate monitoring of the fuel flow through its transparent portion.

Dimensions (mm):
Ø1 =10.00; Ø2 = 0.60; Ø3 = 2.00; Ø4 = 6.50.
A = 29.00; **B** = 20.00; **C** = 25.00; **D** 45.00.

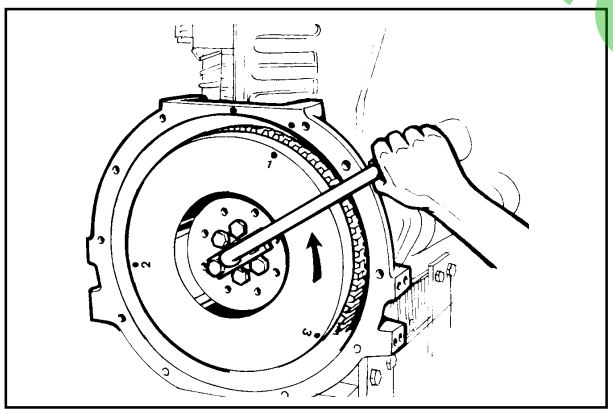

137

Injection timing check

Top up the tank checking that fuel level is at least 10 cm above checking device.
Adjust injection pump rack rod at half-stroke.
Turn the flywheel according to the engine direction of rotation and check that fuel reaches the checking device.
Repeat this last operation; during compression proceed slowly and stop immediately when the fuel is seen to pass through the checking device hole; bring flywheel back by 5 mm: This is the so-called static injection timing.
Follow the same procedure for the other two pumps considering that the flywheel has top dead center reference marks for each cylinder marked with **1**, **3** and **2** and staggered by 120°.

easymotoonline

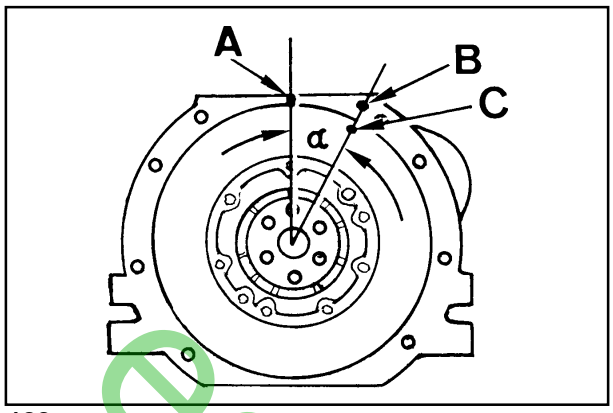

138

Injection timing reference marks on crankcase and flywheel

A = Piston reference mark al the top dead centre
B = Injection timing reference mark compared to **A**
(A - B) = Distance in mm.
C = Piston reference mark in injection tíming position.
α = Reference angle in degrees

Engine type		(A÷B) mm *	α
11LD535-3 11LD625-3	**	60÷65	24°÷26°
11LD535-3 11LD625-3	***	55÷60	22°÷24°
11LD626-3	****	37÷42	15°÷17°

Values given in mm.. have been detected al the periphery of a standard flywheel with 288 mm diameter.
For engines set at 3000 r.p.m.
For engines set at 1500÷2000 r.p.m.
For engines set at 3000 r.p.m.

Note: The clear difference in static injection timing between engines type 11 LD535-3, 11 LD625-3 and 11 LD626-3 is lo be found in the special plunger machining found in the latter. See page 50.

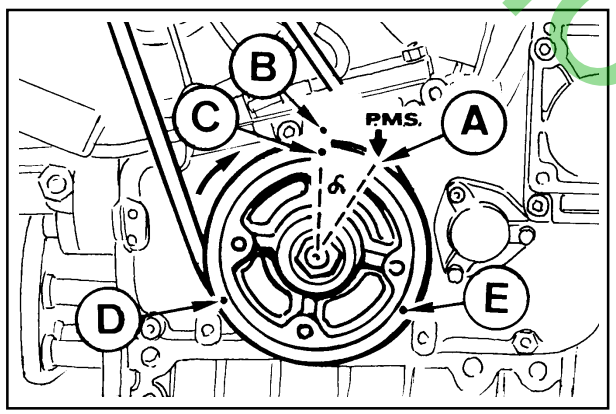

139

Injection timing reference marks on the pulley and the gear cover

A = Gear cover reference arrow al top dead center P.M.S. (T.D.C.), obtained with a casting process.
B = Injection timing mark with reference to **A**
(A - B) Distance in mm.
C, D, E Injection timing mark or top dead center for the individual pistons
a = Reference angle in degrees

Engine type	(A÷B) mm		α
	Pulley dia. 142 mm	Pulley dia. 163 mm	
11LD535-3 11LD625-3	29,7÷32,2	-	24°÷26°
11LD535-3 11LD625-3	-	31÷34	22°÷24°
11LD626-3	18,6÷21	-	15°÷17°

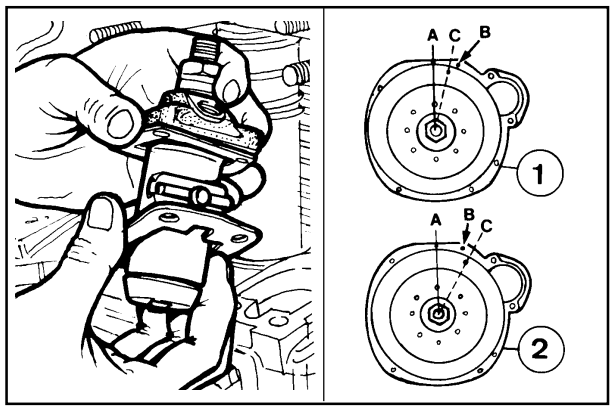

140

141

Injection timing correction

If reference mark **C** does not match with **B** follow examples 1 and 2.
1 Example of late injection timing: remove shims under the pump lo make **C** match with **B**.
2 Example of early injection timing: add shìms under the pump to make **C** match with **B**.

Note: By adding or removing a 0.1 mm shìm under the pump **C** is delayed or advanced by approximately 3 mm.

easymotoouture

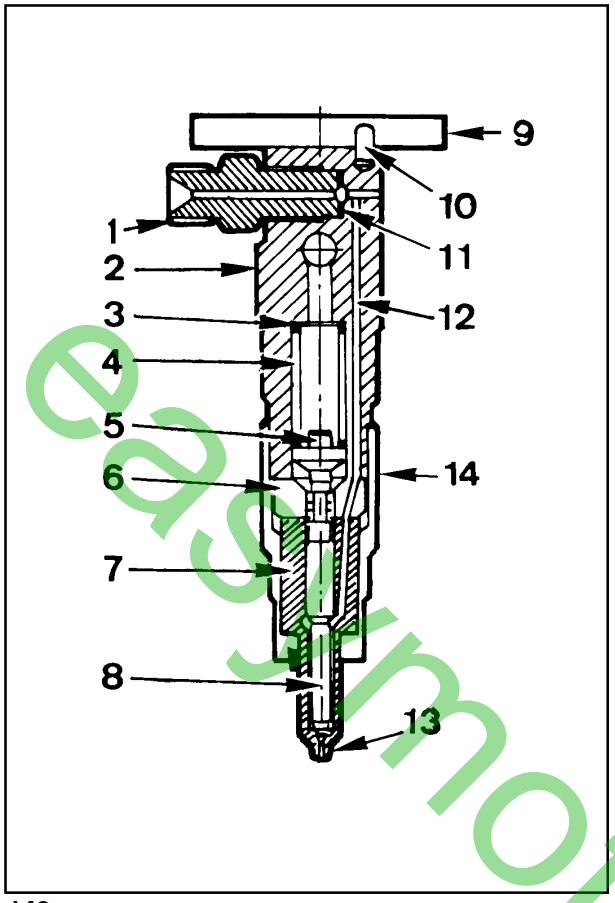

142

INJECTOR

Components:
1 Intake fitting
2 Nozzle holder
3 Shim
4 Spring
5 Pressure rod
6 Intermediate flange
7 Nozzle
8 Needle valve
9 Fixing flange
10 Taper pin
11 Gasket
12 System duct
13 Sump
14 Cup

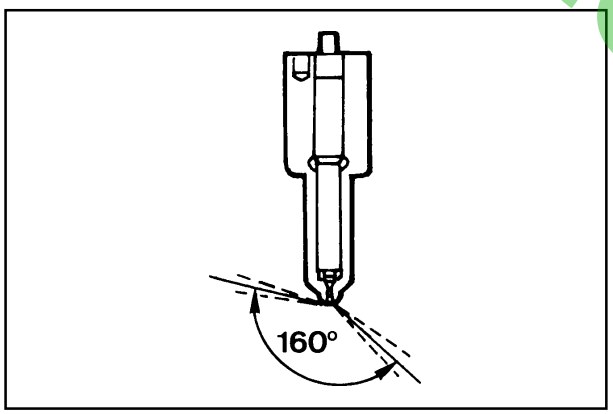

143

Nozzle

Features:
Hole number and diameter 4x0.28 mm.
Jet angles = 160°.
Needle valve elevation = 0.20÷0.22 mm
Hole length = 0.7 mm
Sump diameter and length = 1x1.5 mm

Clean nozzle tip with a brass brush.
Check that holes are not obstructed using a mandrel with steel wire with 0.28 mm diam.
When refitting tighten ring nut at 7 Kgm.

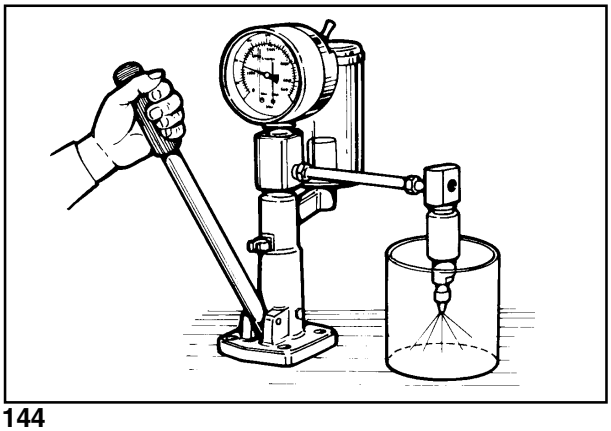

144

Injector setting

Connect injector to a hand pump and check that setting pressure is 210÷220 bar; make the required adjustments, if any, by changing the shim over the spring.
When replacing the spring, setting should be performed at a 10 bar greater pressure (220÷230 bar) to allow for bedding during operation. Check needle valve sealing by slowly moving hand pump until approximately 180 bar.
Replace nozzle in case of dripping.

easymotoculture

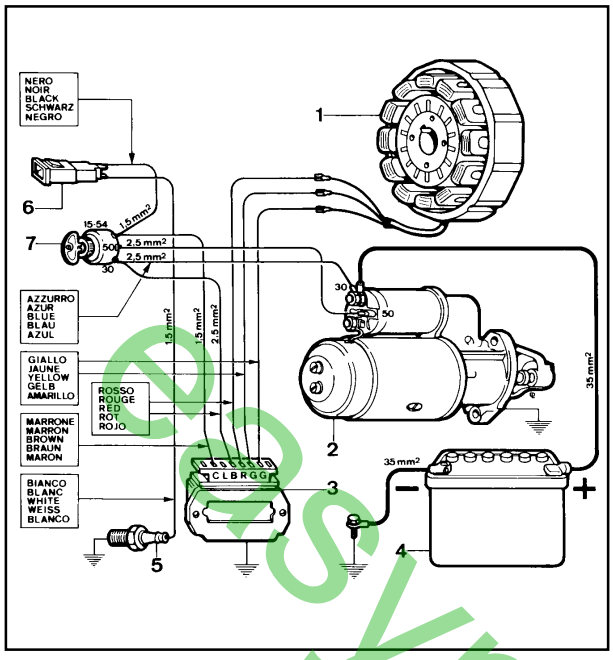

145

STANDARD ELECTRIC EQUIPMENT

Electric starting layout without battery charging light

Components:
1 Alternator
2 Starting motor
3 Voltage regulator
4 Battery
5 Pressure switch
6 Oil pressure warning light
7 Key switch

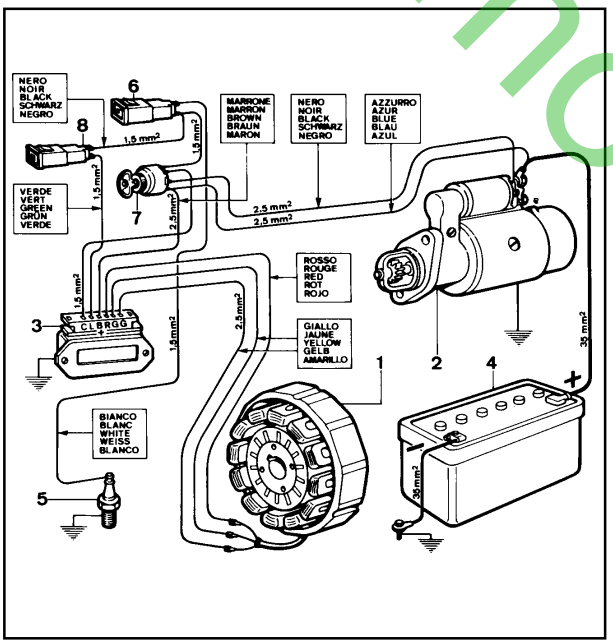

146

Electrical starting layout with battery charging light

Components:
1 Alternator
2 Starting motor
3 Voltage regulator
4 Battery
5 Pressure switch
6 Oil pressure warning light
7 Key switch
8 Battery charging light

Note: Battery, which is not supplied by Lombardini, should feature a 12V voltage.
When choosing battery capacity please consider environmental conditions: 66 Ah are recommended down to -10°C and 88 Ah are recommended below -15°C; in any case do not use a battery with greater capacity than 110 Ah.

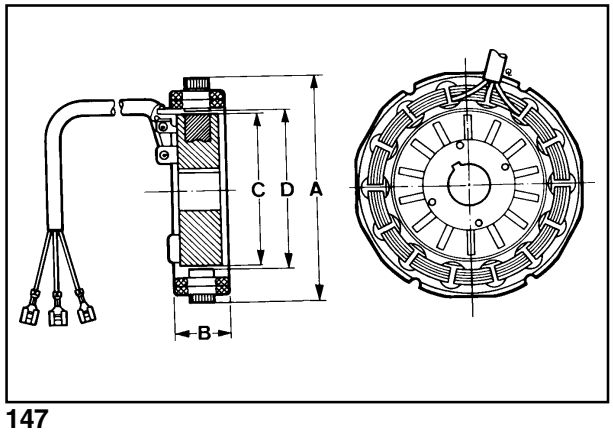

147

12,5 V, 14 A Alternator

Features a fixed armature winding, housed in the bell inside the blower stator.
The rotating permanent magnet inductor is located in the fan spindle. See page 17.
Dimensions (mm):
A = 111.701÷111.788
B = 31.000÷33.500
C = 76.226÷76.300
D = 77.400÷77.474

Note: Clearance between armature winding and inductor (air gap) should be 0.55÷0.63 mm.

easymotoculture

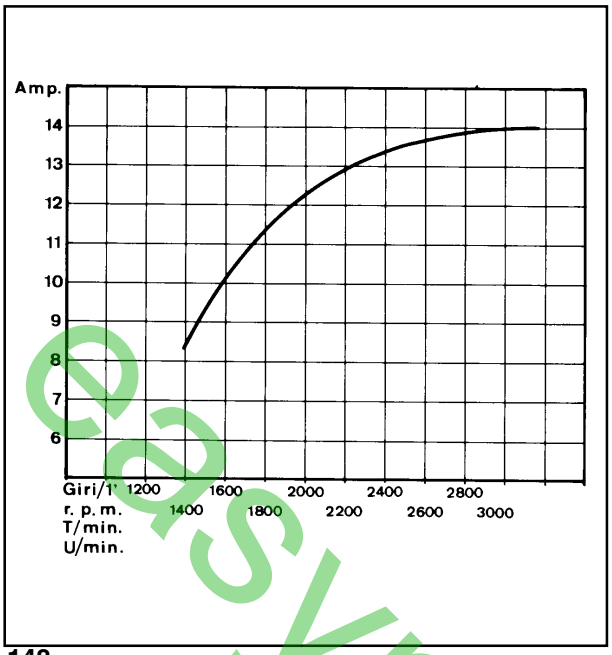

148

Alternator battery charger curve (12.5 V, 14A)

The curve was obtained at room temperature of + 25°C with 12.5V battery voltage.

Note: The r.p.m. shown in the table refers to the engine.

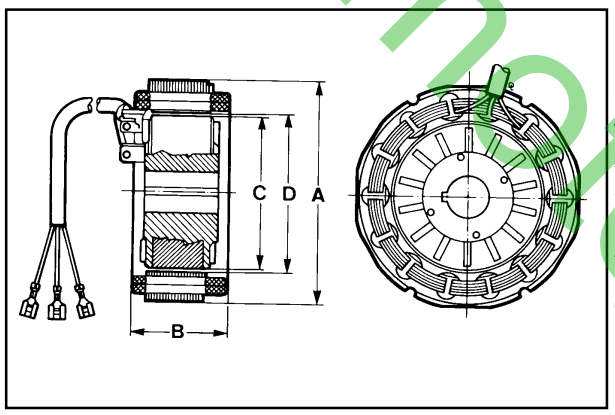

149

12 V, 21 A Alternator

Features a fixed armature winding housed in the bell inside the blower stator.
The rotating permanent magnet inductor is located in the fan spindle.
See page 21.
Diameter size (mm):
A = 111.701÷111.788
B = 49.500÷52.000
C = 76.226÷76.300
D = 77.400÷77.474

Note: Clearance between armature winding and inductor (air gap) should be 0.47÷0.63 mm.

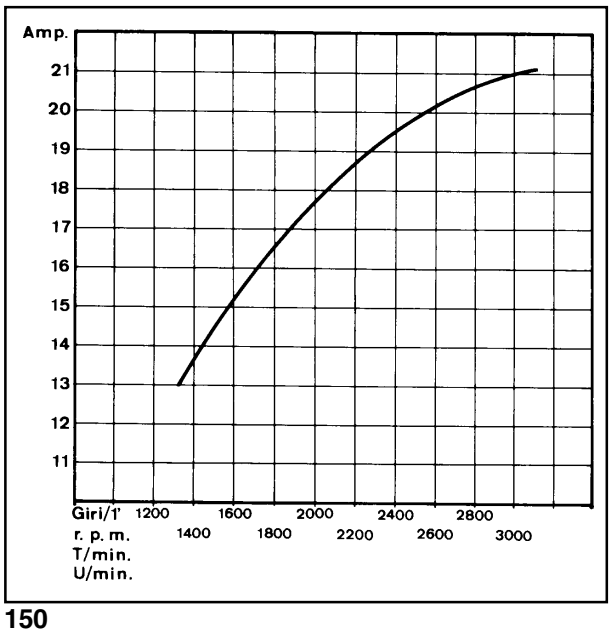

150

Alternator battery charger curve (12 V, 21 A)

The curve was obtained at room temperature of + 25°C with 12.5V battery voltage.

Note: The r.p.m. shown in the table refers to the engine.

easymotoculture

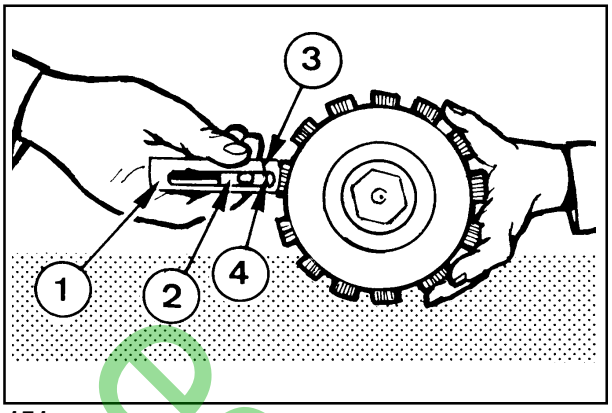

151

Magnetization checking tool (Part No. 7000-9727-001)

Components:
1 Casing
2 Slider
3 Casing reference line
4 Slider reference line
Rest the tool end horizontally onto the magnetic poles. Hold sfider so that its reference line coincides with the casing reference line. Release slider: if no attraction occurs the rotor is demagnetized; therefore replace alternator.

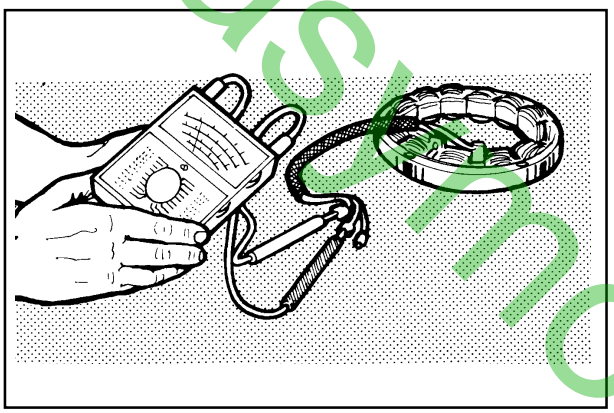

152

Checking for cable continuity

Check that stator windings have no unsoldered connections, burnt areas or grounded wires.
Using an ohmmeter check for continuity between the red cable and the two yellow ones.
Furthermore, check that they are insulated from the ground.

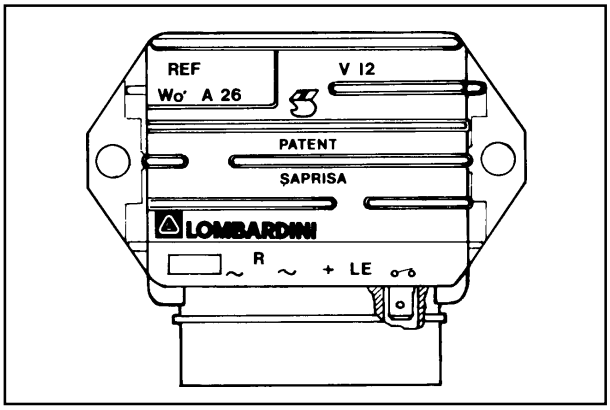

153

VOLTAGE REGULATOR

Type LOMBARDINI, supplied by SAPRISA and DUCATI: Voltage 12 V, max. current 26A. References for SAPRISA connections with the corresponding DUCATI connections.

SAPRISA	DUCATI
~	G
R	R
+	B
LE	L
⌀	C

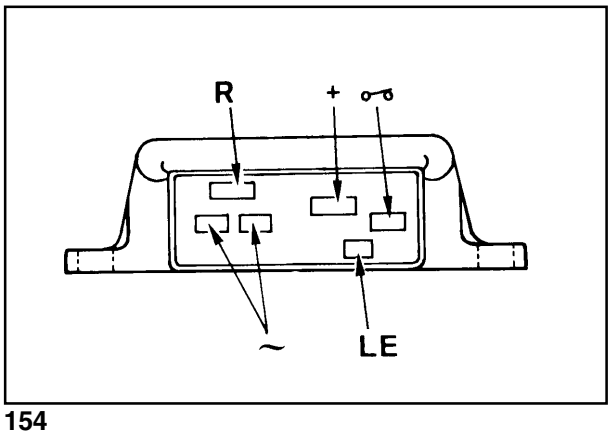

154

To avoid wrong connections 3 different sizes are supplied.

SAPRISA	DUCATI	CONNECTION SIZE mm	
		WIDTH	THICKNESS
~	G	6.25	0.8
R	R	9.50	1.12
+	B	9.50	1.12
LE	L	4.75	0.5
⌀	C	6.25	0.8

easymotoculture

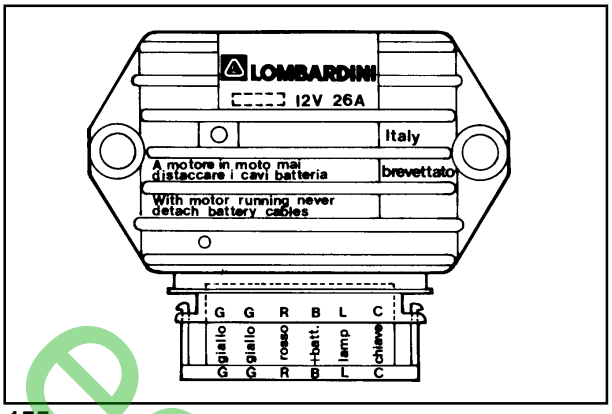

155

The voltage regulator fits to both circuits with and without battery charging light; in the latter case connections LE (SAPRISA) and L (DUCATI) are not used.
The voltage regulator shown in the picture is LOMBARDINI-DUCATI.

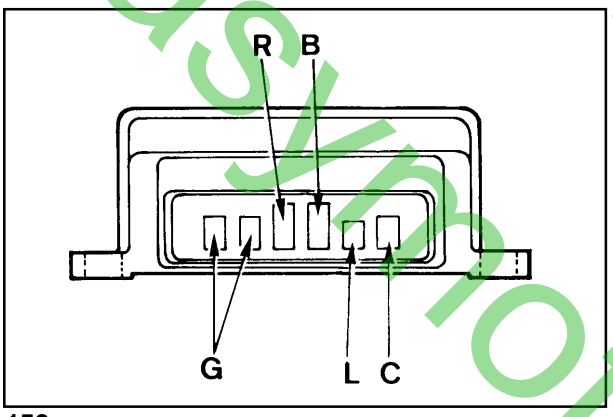

156

Connections for LOMBARDINI-DUCATI voltage regulator

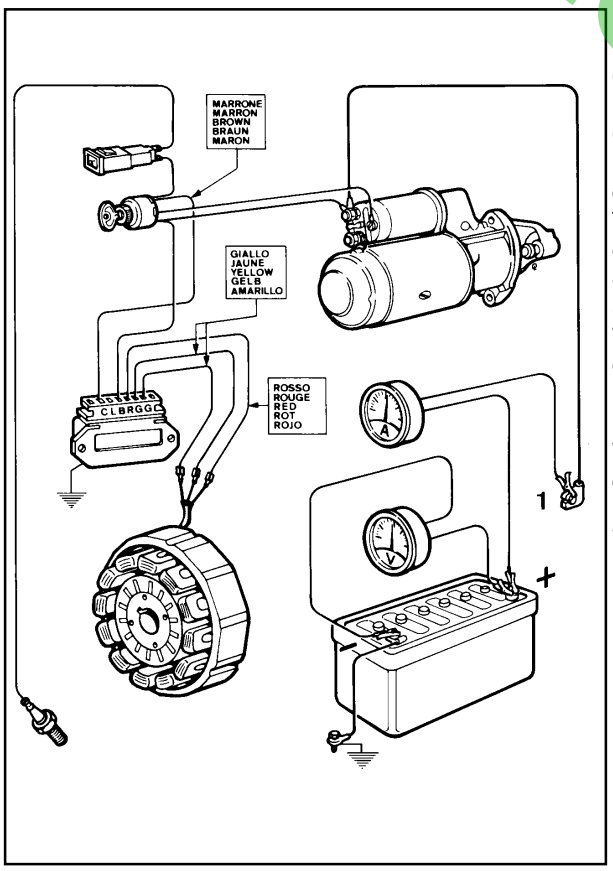

157

How to check voltage regulator for proper operation

Check that connections correspond to the layout.
Disconnect the terminal from the battery positive poie.
Connect a d.c. voltmeter between the two battery poles.
Fit an ammeter between the positive pole and the corresponding cable **1** terminal.
The ammeter should be suitabie for reading the required value (14 or 21 A) and for withstanding the starting motor peak absorption (400 ÷450 A).
Start a couple of times until battery voltage drops below 13 V.
When battery voltage reaches 14.5 V the ammeter current suddeniy drops down to almost zero.
Replace regulator if recharge current is zero with voltage below 14 V.

Warning: When the engine is running do not disconnect battery cables or remove the key from the control panel.
Keep regulator away from heat sources since temperatures above 75°C mmght damage it.
No electric welding on engíne or application.

easymotoonline

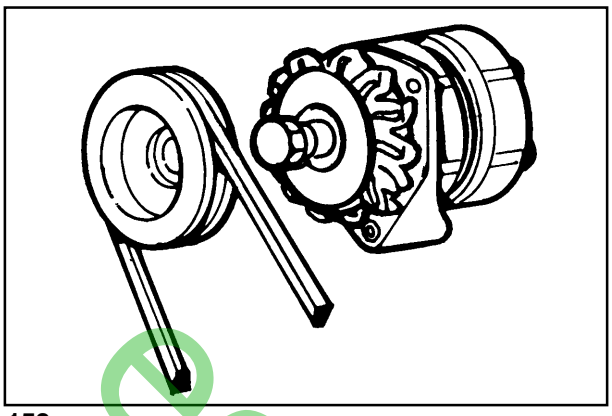

158

Alternator type Bosch GI 14 V, 33 A

The alternator is ot the claw-pole rotor type with built-in voltage reguiator. The rotating motion is conveyed by the engine through a 'V' belt and sheave.

Features: 12V rated voltage. Max. current 33A at 7000 alternator r.p.m.. RH direction of rotation.

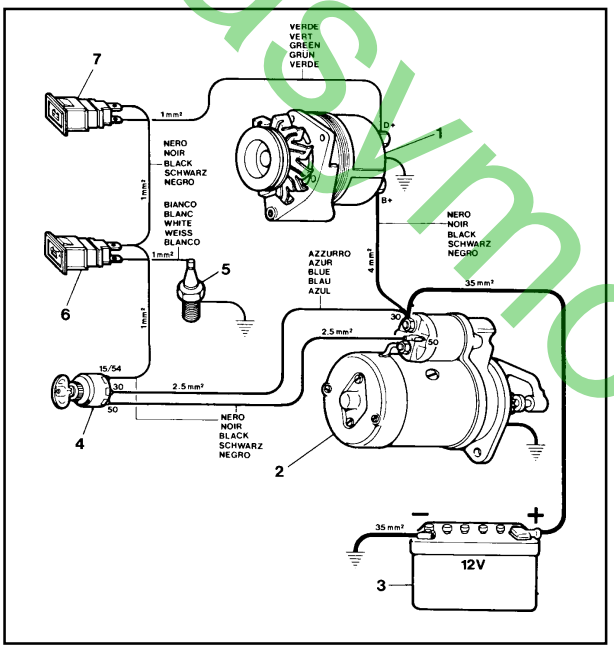

159

Alternator type Bosch Gil 14 V, 33 A layout

Components:
1 Alternator
2 Starting motor
3 Battery
4 Key switch
5 Pressure switch
6 Oil pressure warning light
7 Battery charging light

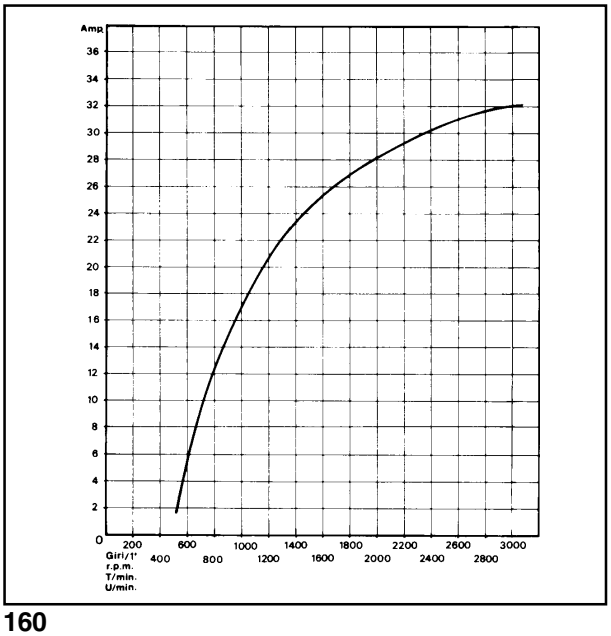

160

14 V, 33 A Bosch G1 alternator battery charger curve

The curve was obtained at room temperature of +25°C. Battery terminal voltage is 12.5 V.
The r.p.m. shown on the table refers to the engine.

easymotoculture

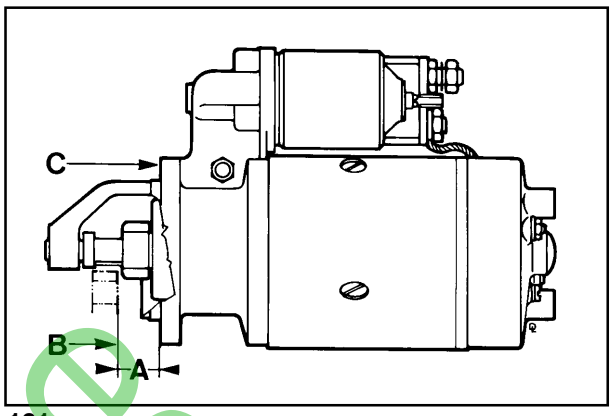

161

STARTING MOTOR

Bosch tipo JF (R) 12 V, class 2.5
RH direction of rotation
A = 23÷24 mm
B = Ring gear plane
C = Flange plane

Warning: The flywheel should not project from ring gear plane **B**.

Note: Apply to Bosch Service Centers for any type of repair.

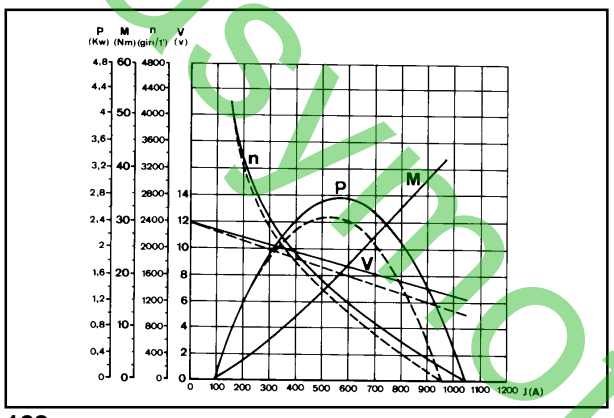

162

Characteristic curves for starting motor type Bosch JF (R) 12 V

Curves were obtained at room temperature of + 20°C with 88 Ah batteries.
V = Motor terminal voltage in Volt
P = Power in kW
C = Torque in N/m
N = Motor speed in r.p.m.
J (A) = Absorbed current in Ampere

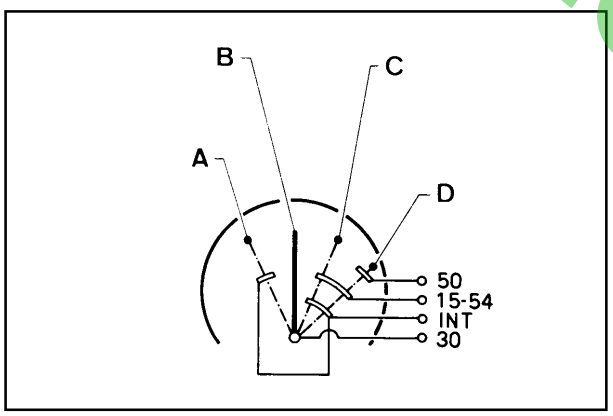

163

Starting motor layout

A = Parking lights
B = Stop
C = Run
D = Start

easymotoculture

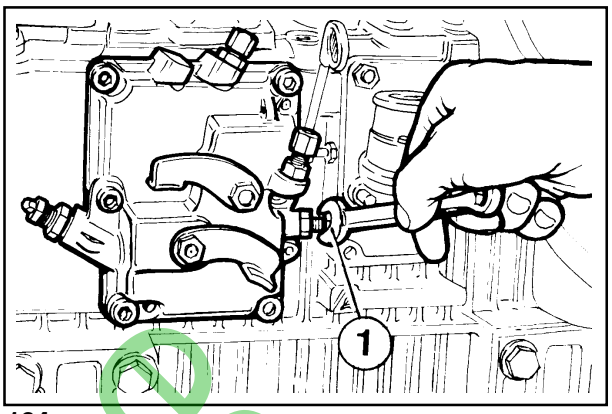

164

SETTINGS

1) **Idling speed setting in no-load conditions (standard)**
After filling with oil and fuel, start the engine and let it warm up for 10 minutes. Adjust idling speed at 800÷900 r.p. m. by turning setscrew **1**; then tighten lock nut.

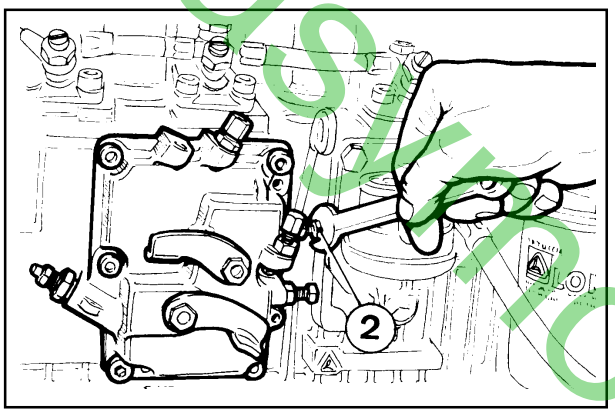

165

2) **Full speed setting in no-load conditions (standard)**

After setting idle speed turn screw 2 and set full speed in no-load conditions at 3200 r.p.m.; then tighten lock nut.

Note: When the engine reaches the pre-set power full speed stabilizes at 3000 r.p.m.

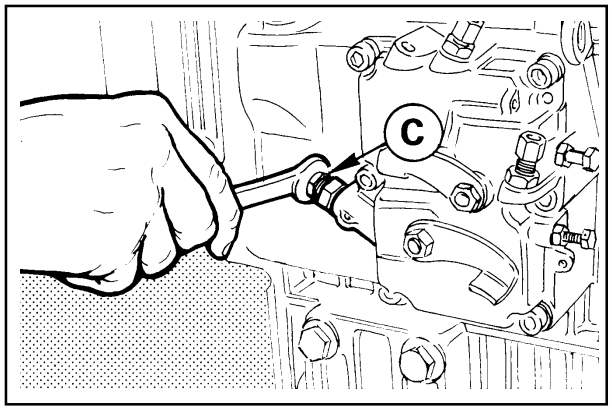

166

Injection pump delivery setting

This setting should be performed at the torque dynamometer. If not, setting is only approximate.
The following steps are required:
Loosen delivery limiting device **C** by 5 turns.
Bring engine to full speed in no-load conditions i.e. 3200 r.p.m..
Tighten limiting device until the engine shows a drop in r.p.m..
Unscrew limiting device **C** by 1½ turn. Tighten lock nut.

Note: If the engine, under full load, generates too much smoke tighten **C**; if no smoke is observed at the exhaust and the engine cannot reach its full power unscrew **C**.

easyphotoculture

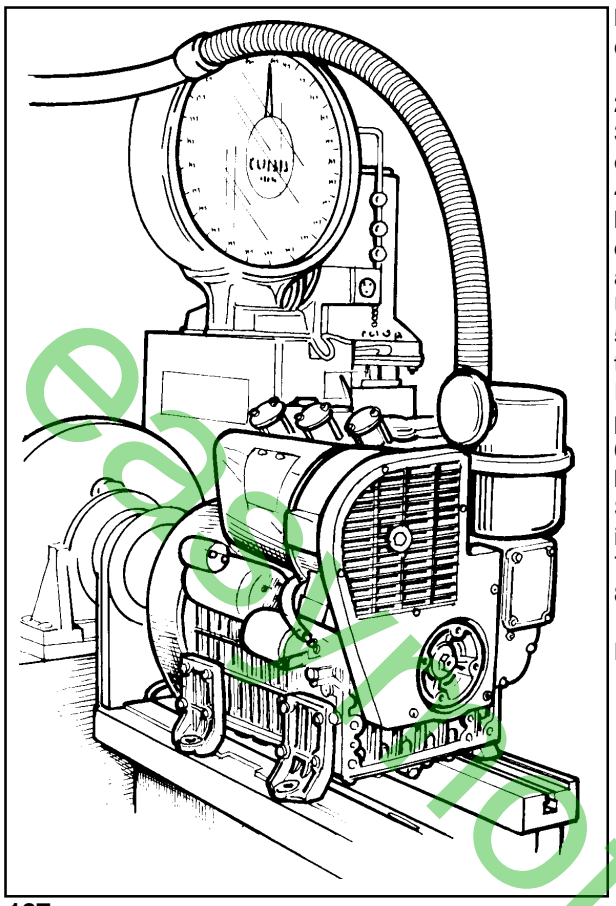

167

Injection pump delivery setting with engine at the torque dynamometer

1) Bring engine to idling speed
2) Unscrew delivery limiting device **C** (see page 59)
3) Bring engine to the power and r.p.m. required by the manufacturer of the device,
4) Check that consumption falls within the table specifications (see below). If consumption is not as indicated change balance conditions at the torque dynamometer by varying the load and adjusting the governor.
Under stable engine conditions check consumption again.
5) Tighten limiting device **C** until the engine r.p.m. decreases. Lock the iimiting device by means of lock nut.
In versions with manually-operated mechanical extra fuel feeding **D** perform this operation keeping drive rod **E** as shown in the figure.
6) Release brake completely and check at what speed the engine becomes stable.
Speed governor should comply with the requirements of the class indicated by the manufacturer of the device.
7) Stop the engine
8) Check valve clearance when the engine has cooled down.

Required settings (as most commonly applies)

Engine	R.P.M.	POWER		Specific fuel consumption		
		CV	kW	Time (sec.) for 100 cmc	g/CV. h	g/kW.H
11LD625-3	3000	N 38	N 27,9	38÷40	197÷202	268÷275
11LD625-3	3000	NB 35,16	NB 26	43÷46	185÷195	251÷265
11LD625-3	2200	NB 30,60	NB 22,5	52÷56	175÷185	238÷251
11LD625-3	1800	NB 24	NB 17,65	66÷69	182÷189	247÷257
11LD625-3	1500	NB 20	NB 14,7	79÷82	182÷189	247÷257
11LD535-3	3000	N 33,3	N 24,5	43÷45	200÷209	265÷279
11LD535-3	3000	NB 29,92	NB 22	50÷53	190÷200	258÷272
11LD535-3	2200	NB 25,84	NB 19	62÷66	175÷185	238÷251
11LD626-3	3000	N 42	N 31	36÷38	190÷200	258÷272
11LD626-3	3000	NB 39	NB 28,6	40÷42	185÷195	251÷265
11LD626-3	2200	NB 33	NB 24,2	48÷51	180÷187	245÷254
11LD626-3	1800	NB 27,3	NB 20	59÷61	180÷187	245÷254
11LD626-3	1500	NB 22	NB 16,1	73÷76	180÷187	245÷254

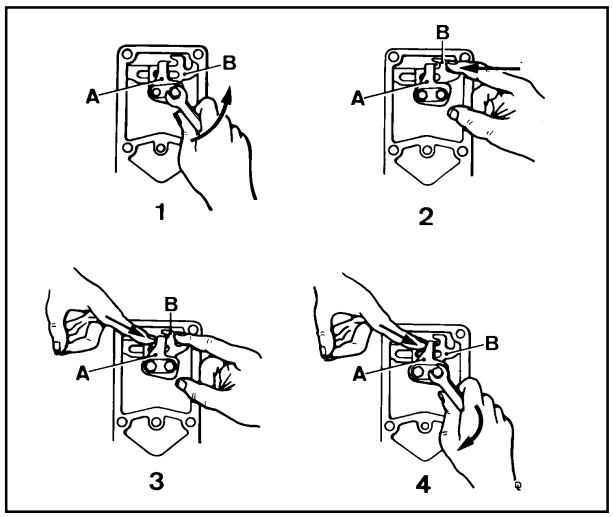

168

Stop setting

Remove fuel feeding pump and cover.
1) Loosen both bolts fixing plate **A**.
2) Push injection pump **B** control rod to the right and keep it in this position.
3) Push plate **A** to the right until it touches rod **B** and stop.
4) Release rod **B** and push plate **A** to the right so that rod **B** has a stroke of 1 mm.
Tighten both bolts.

Note: Under these conditions no damage can be caused to the injection pump rack rod stops by sudden impacts due to the available control solenoids.

esplotura

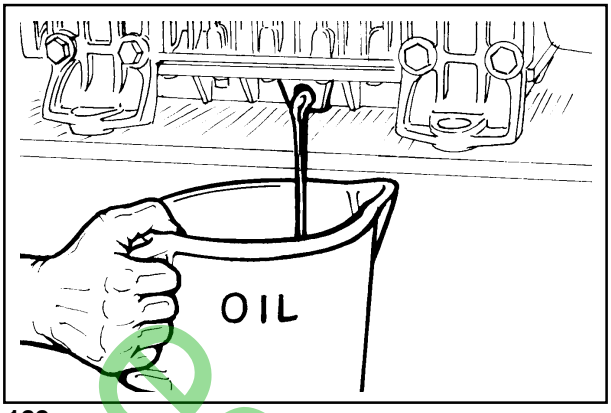

169

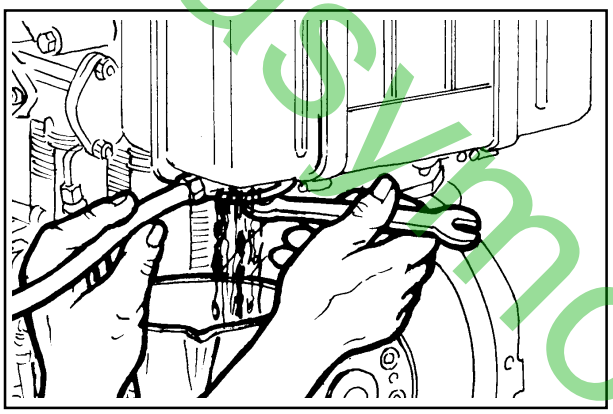

170

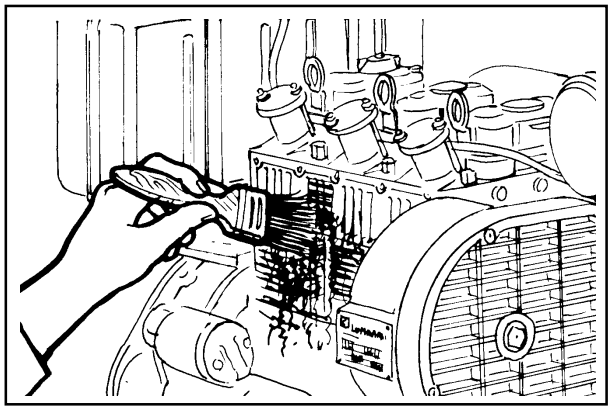

171

STORAGE

Prepare engines as follows for storage over 30 days:

Temporary protection (1÷6 months).

• Let engine work at idling speed in no-load conditions for 15 minutes.
• Fill crankcase wíth protection oil MIL-1-644-P9 and let engine run al 3/4 full speed for 5 - 10 minutes.
• When engine is warm empty oil pan and fill with standard new oil.
• Remove fuel tube and empty the tank.
• Remove fuel filter, replace cartricige if dirty and refit. Carefully clean cylinder fins, heads and fan.
• Seal all openings with tape.
• Remove injectors, pour a spoonful of oil type SAE 30 into the cylinders and rotate manually to distribute the oil. Refit injectors.
• Spray oil type SAE 10W ìnto exhaust and intake manifolds, rocker arms, valves, tappet etc. Grease all unpainted parts.
• Loosen belt.
• Wrap the engine in a plastic film.
• Store in a dry place, if possible not directly on the soil and far from high voltage electric lines.

Permanent protection (over 6 months)

The following is recommended apart from the above instructions:

• For the lubrication and injection system as well as for moving parts use rustproof oil type MIL-L-21260 P10, grade 2, SAE 30 (Ex. ESSO RUST BAN 623 - AGIP, RUSTiA C. SAE 30). Let the engine run with rustproof oil and drain any excess.
• Coat external unpainted surfaces with antirust type IVIIIL-C-161173D, grade 3 (Ex. ESSO RUST BAN 398 - AGIP, RUSTIA 100/F).

How to prepare the engine for operation

• Clean engine outside
• Remove protections and covers.
• Remove antirust by an appropriate solvent or degreaser.
• Remove injectors, fill wìth standard oil, turn crankshaft by a few revolutions, remove oil pan and drain the protective oil.
• Check injectors, valve clearance, belt tensíon, head tightening, oil filter and air cleaner for proper setting. If the engine is stored over a long period of time (over 6 months) check one of the bushings for corrosion.

easymotoure

easymotoculture

MAIN TORQUE SPECIFICATIONS

COMPONENT	Diameter and pitch (mm)	Torque Kgm
Connecting rod	8x1	40
Injection pump delivery valve union	18x1,5	40
Rocker arm cover	8x1,25	20
Center main bearing support	8x1,25	25
Intake manifold	8x1,25	25
Exhaust manifold	8x1,25	20
Air shroud	8x1,25	15
Throttle control cover	8x1,25	25
Oil pump casing	8x1,25	25
Oil filter	8x1,25	25
Internal oil strainer	8x1,25	25
Hydraulic pump flange	8x1,25	25
Camshaft gear	24x2	250
Oil pump gear	10x1,5	35
Starting motor	10x1,5	45
Rocker arm shaft	8x1,25	25
Engine mounting foot	10x1,5	40
Fuel feeding pump	8x1,25	25
Injection pump	8x1,25	25
Nozzle holder	6x1,0	12
Oil pan	8x1,25	25
Blower crankshaft pulley	16x1,5	300
Main bearing support, gear case side	8x1,25	25
Main bearing support, flywheel side	8x1,25	25
Center main bearing support	10x1,5	30
Hydraulic pump gear support	8x1,25	25
Fuel tank bracket	8x1,25	30
Fuel tank bracket	8x1,25	25
Cylinder head	10x1,5	55

USE OF SEALANTS

POSITION	Type of sealant
Tank bracket vibration dampers	Loctite 270
Oil pump nut or union	Loctite 270
Oil pump gear threading	Loctite 270
Oil filter cartridge nipple	Loctite 270
Oil filter center plate nipple	Loctite 270
Head stud	Loctite 270
Main bearing support fixing stud bolt, flywheel side	Loctite 270
Crankcase stud bolt	Loctite 270
Fuel feeding pump stud bolt	Loctite 270
Blower housing stud	Loctite 270
Tank bracket gasket	Loctite IS 495

easymotocouture

STANDARD BOLT TORQUE SPECIFICATIONS

DESCRIPTION						
Diameter x Pitch (mm)	R ≥ 800 N/mm²		R ≥ 1000 N/mm²		R ≥ 1200 N/mm²	
	Nm	Kgm	Nm	Kgm	Nm	Kgm
4x0,70	3,6	0,37	5,1	0,52	6	0,62
5x0,80	7	0,72	9,9	1,01	11,9	1,22
6x1,00	12	1,23	17	1,73	20,4	2,08
7x1,00	19,8	2,02	27,8	2,84	33	3,40
8x1,25	29,6	3,02	41,6	4,25	50	5,10
9x1,25	38	3,88	53,4	5,45	64.2	6,55
10x1,50	52,5	5,36	73,8	7,54	88.7	9,05
13x1,75	89	9,09	125	12,80	150	15,30
14x2,00	135	13,80	190	19,40	228	23,30
16x2,00	205	21,00	289	29,50	347	35,40
18x2,50	257	26,30	362	37,00	435	44,40
20x2,50	358	36,60	504	51,50	605	61,80
22x2,50	435	44,40	611	62,40	734	74,90
24x3,00	557	56,90	784	80,00	940	96,00

easymotoculture

LOMBARDINI

42100 Reggio Emilia – Italia - ITALY
Via Cav. del Lavoro Adelmo Lombardini, 2 - Cas. Post. 1074
Tel. (+39) 0522 3891 - Telex 530003 Motlom I – Telegr.: Lombarmotor
R.E.A. 227083 - Reg. Impr. RE 10875
Cod. fiscale e Partita IVA 01829970357 - CEE Code IT 01829970357
E-MAIL: atl@lombardini.it
Internet: http://www.lombardini.it

easymotoculture

La Lombardini si riserva il diritto di modificare in qualunque momento i dati contenuti in questa pubblicazione.
Lombardini se rèserve le droit de modifier, à n'importe quel moment, les données reportées dans cette publication.
Data reported in this issue can be modified at any time by Lombardini.
Lombardini vorbehält alle Rechte, diese Angabe jederzeit verändern.
La Lombardini se reserva el derecho de modificar sin previo aviso los datos de esta publicación.